2014 RAM PICKUPS

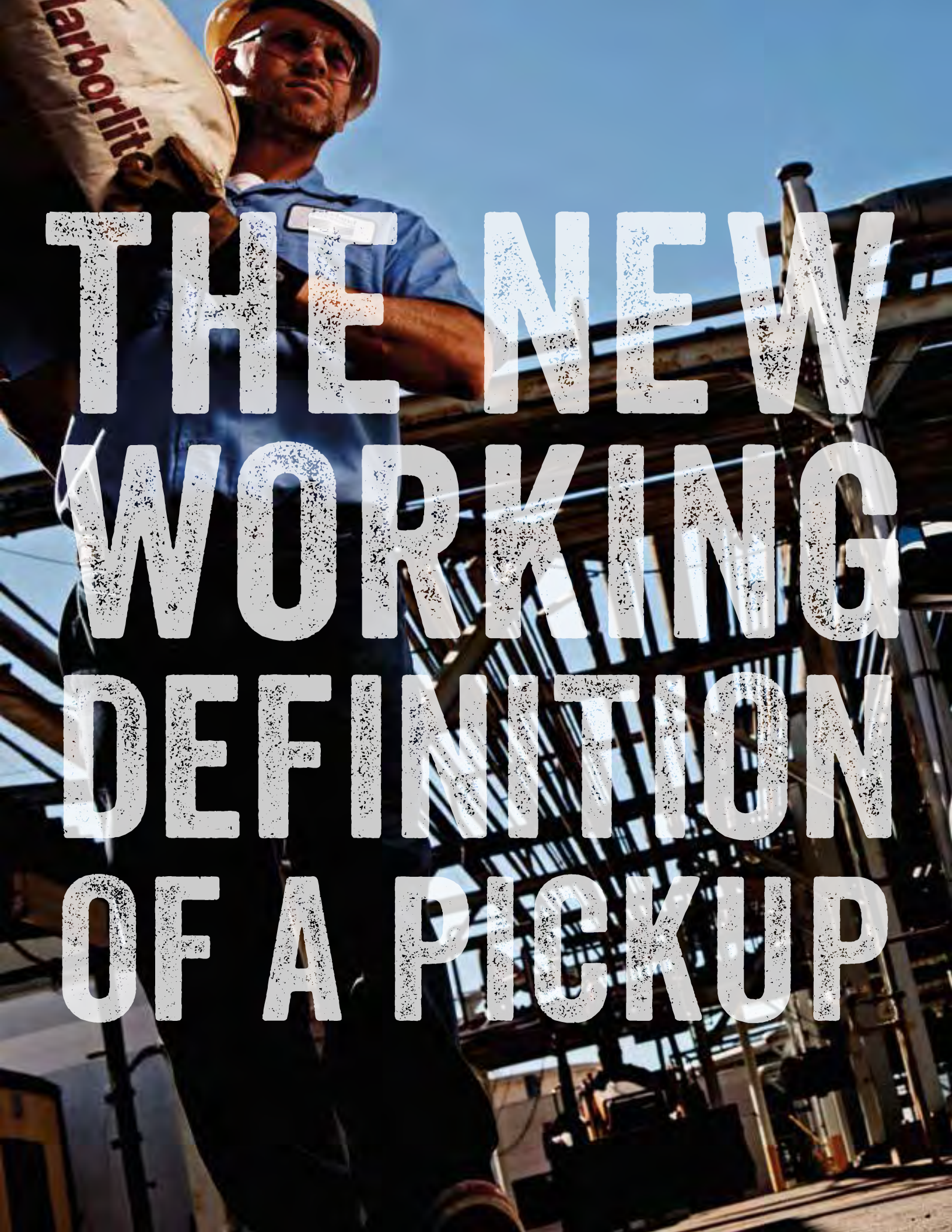

THE NEW WORKING DEFINITION OF A PICKUP

OUTSTANDING ATTRIBUTES FOR EFFICIENCY, CAPABILITY AND POWER. CHOOSE THE CLASS TO MEET THE NEED: RAM WILL TAKE YOU TO THE TOP OF THAT CLASS. 2014 RAM 1500 AND 2500/3500 HEAVY DUTY OFFER A WEALTH OF ADVANTAGES FOR THAT SELDOM-TRAVELED ROAD TO LEADERSHIP. **THIS IS THE YEAR OF THE POWERTRAIN.** ACROSS THE BOARD AND ACROSS THE COUNTRY, THE 2014 RAM PICKUPS REDRAW THE GEOGRAPHY OF TECHNOLOGY, WITH THE NEW AVAILABLE ECODIESEL V6* FOR RAM 1500, THE RAM FIRST AVAILABLE 6.4-LITER HEMI® V8 FOR HEAVY DUTY, THE GROUNDBREAKING TORQUEFLITE® 8 AUTOMATIC FOR RAM 1500 AND THE NEW AND CLASS-EXCLUSIVE[1]† AVAILABLE AUTO-LEVEL REAR AIR SUSPENSION* FOR RAM HEAVY DUTY. **STANDOUT TECHNOLOGY TRANSLATES INTO COMPONENTS THAT STAND UP—AND STAND APART.** THIS IS RAM: CAPABILITY THAT EXCEEDS THE NEED, BACKED BY ULTRAEFFICIENT PERFORMANCE. RAM DOESN'T REST WITH MERELY BEING BETTER. OUR AIM IS TO ACHIEVE BEST-IN-CLASS. **2014 RAM.** THE NEW WORKING DEFINITION OF A PICKUP.

2014 RAM PICKUPS: 1500, 2500, 3500

CONTENTS

4 *Ram 1500 Introduction*
7 *Ram 1500 Powertrain*
10 *Ram 1500 Chassis/Suspension*
13 *Ram 1500 Wheels*
13 *Ram 1500 Trim Levels*
16 *Ram 1500 Buyer's Guide*
18 *Ram Pickup Interior*
19 *Ram Pickup Electronics*
21 *Ram Pickup Cargo Capability*
23 *Ram Pickup Exterior*
24 *Ram Pickup Interior Fabrics*
26 *Ram 2500/3500 Introduction*
28 *Ram 2500/3500 Towing/Payload*
30 *Ram 2500/3500 Powertrain*
33 *Ram 2500/3500 Capability Specs*
35 *Ram 2500/3500 Chassis/Suspension*
37 *Ram 2500/3500 Wheels*
38 *Ram 2500/3500 Trim Levels*
41 *Ram 2500/3500 Buyer's Guide*

*Late availability. †Note: all disclaimers and disclosures can be found on the last page.

RAM

MORE STRENGTHS THAN EVER. THIS IS THE YEAR OF RAM.

Take a good look at the 2014 Ram 1500 pickups. Recent developments take this portfolio into new territory for fuel-efficient performance, capability and comfort, and now with more powertrain choices than ever.

Our directive was clear: design and manufacture strengths so good, they strive for best-in-class status. The 2014 Ram 1500 breaks new ground with the available 3.0-liter EcoDiesel V6,* mating phenomenal torque with the class-exclusive[2] TorqueFlite® 8 automatic—a sophisticated and powerful transmission that features close-ratio gearing for effortless acceleration and great fuel efficiency. The impressive array of powertrain offerings also includes the award-winning Pentastar® V6 and available legendary HEMI® V8 engines; transmissions now range from the proven 6-speed automatic to the smooth-shifting TorqueFlite 8. Bolstered by ramped up GCWRs and GVWRs, these pickups are ready to handle it all.

Top it all off with the quality that comes from our unsurpassed[2] 5-Year/100,000-Mile Powertrain Limited Warranty[3] and you've got every strength you need in a light-duty pickup. 2014 Ram 1500.

Shown on next page.

TOP: *Ram 1500 Crew Cab Laramie, shown with Maximum Steel Metallic and Bright Silver Metallic two-tone exterior, equipped with the available 5.7-liter HEMI V8. Ram Crew Cab offers expansive rear-seat room and can effortlessly tow up to 9,800 lb (as shown).*†

MIDDLE LEFT: *The Ram leader for fuel efficiency, the Ram 1500 HFE (High Fuel Efficiency) in Flame Red. Available in Regular Cab only, Ram 1500 HFE features the ideal combination for gas-powered fuel-sipping performance: the 3.6-liter Pentastar V6/TorqueFlite 8 powertrain. Further enablers for fuel efficiency include the class-exclusive[2] Active Grill Shutters and Stop/Start Technology.*

MIDDLE RIGHT: *Ram 1500 Laramie, shown in a Crew Cab configuration with the Black and Bright Silver Metallic two-tone exterior and powered by the available 5.7-liter HEMI V8 engine, offers trailering capability that can handle up to 9,800 lb (as shown).*†

BOTTOM: *Shown from above, this Ram 1500 Crew Cab Tradesman in Bright White features the class-exclusive[2] RamBox® Cargo Management System, available for select Ram 1500 models with 5-foot 7-inch or 6-foot 4-inch beds. The bedside compartments are drainable, illuminated and lockable—with lock control an integral part of the available class-exclusive[2] All-Secure™ Locking System.*

Meet the fast-growing truck brand that everybody's talking about—and for all the right reasons. From long-distance towing to long-term quality, 2014 Ram 1500 is completely in command of it all.

*Late availability. †When properly equipped.

Properly secure all cargo.

THE 2014 RAM 1500 POWERTRAIN LINEUP: OUR MOST VERSATILE AND FUEL-EFFICIENT SELECTION EVER.

5 YEAR/100,000 MILE
POWERTRAIN LIMITED WARRANTY[3]

ALL RAM POWERTRAINS ARE COVERED BY A FULLY TRANSFERABLE POWERTRAIN LIMITED WARRANTY.[3]

Properly secure all cargo.

SHIFTING AT THE SPEED OF INGENUITY: THE TORQUEFLITE® 8.

THE BENCHMARK TORQUEFLITE 8 AUTOMATIC. AVAILABLE FOR RAM 1500 WITH ALL ENGINES.

RAM EXCLUSIVE '14

Dual focus, one vision: provide outstanding shift qualities and impeccable performance from highway cruising to heavy hauling—while making a very real contribution to the impressive Ram 1500 fuel efficiency figures. The groundbreaking TorqueFlite 8 is the answer.

For a more refined operation, new Ram 1500 models equipped with the TorqueFlite 8 use steering wheel-mounted buttons for manual gear range selection—offering more control when towing and hauling heavy loads.

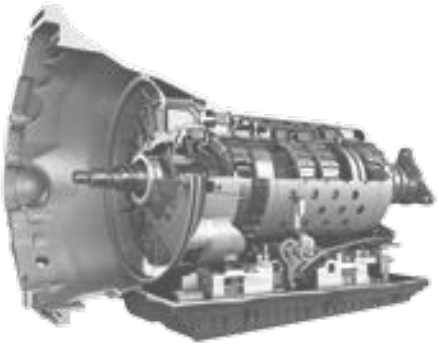

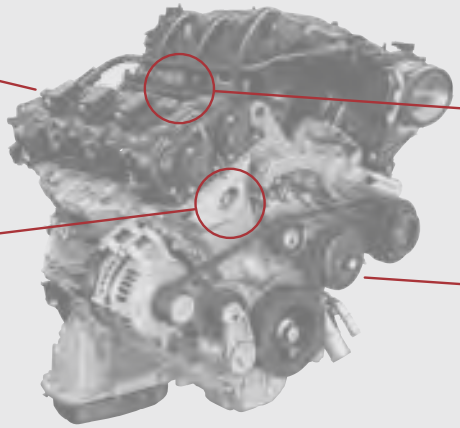

Thermal management is critical: the 3.6-liter Pentastar® V6 keeps temperatures at peak operating figures for ideal performance and fuel-efficient operation.

Aluminum alloy pistons are lightweight with outstanding durability. The design reduces the reciprocating mass inside the engine to enhance performance and overall efficiency.

Flex Fuel capability gives you welcome latitude when filling the tank. The E-85 calibration permits use of either unleaded gasoline or ethanol.

The 21st-century engineering that went into the development of the Pentastar V6 engine has made it a multiple award-winner. Features like Variable Valve Timing (VVT) enable efficient power and precise operation. Performance is exceptional.

3.6L PENTASTAR V6

305 HORSEPOWER **269** LB-FT OF TORQUE **25** MPG HWY*

V6 EFFICIENCY AND CAPABILITY. 100% RAM.

RAM BEST-IN-CLASS '14

Ram broke new ground last year when it combined the efficient capability of the Pentastar V6 with the first-ever truck application of an 8-speed automatic transmission—the class-exclusive[2] TorqueFlite 8. The 2014 Ram 1500 carries on that tradition, providing acclaimed figures for towing and hauling—and then topping it off with best-in-class[4] mpg highway.

Little wonder why this powertrain combination has led to major awards and critical acclaim from journalists, professional drivers and independent third-party testing facilities. The formidable Pentastar V6 with the TorqueFlite 8 handles double duties at every turn, providing V8-equivalent power with proven V6 economies, enabling available 4x4 toughness (the working definition of full-size truck capability), and with remarkably little noise, vibration and harshness (NVH). In every way, the Pentastar is the benchmark for a V6.

DURABILITY, DEFINED. *Pentastar V6 factors for long-life performance and that best-in-class[4] ranking for mpg highway include the "Silent Chain" timing drive, dual overhead cams, high-flow "tumble" intake ports and a seriously authoritative 10.2:1 compression ratio.*

THERMAL MANAGEMENT. *The Pentastar V6 and TorqueFlite 8 automatic utilize Thermal Management Systems, keeping fluids at ideal operating temperatures for top-level performance and fuel-efficient operation.*

PULSE-WIDTH MODULATION. *This technology is all about modulating electrical energy for specific vehicle needs rather than running at a constant rate. Ram 1500 utilizes pulse-width modulation for the fuel pump, cooling fan and HVAC blower controls.*

3.6L PENTASTAR V6 CAPABILITY

(WHEN PROPERLY EQUIPPED)

REGULAR CAB 6'4" BOX
7,300-LB MAX TOW CAPACITY
1,590-LB PAYLOAD CAPACITY

REGULAR CAB 8' BOX
7,300-LB MAX TOW CAPACITY
1,900-LB PAYLOAD CAPACITY

QUAD CAB® 6'4" BOX
7,450-LB MAX TOW CAPACITY
1,920-LB PAYLOAD CAPACITY

CREW CAB 5'7" BOX
7,400-LB MAX TOW CAPACITY
1,870-LB PAYLOAD CAPACITY

*EPA estimated 17 mpg city/25 mpg highway on Ram 1500 V6 4x2.

RAM OWNS POWER.

OUR POWERTRAIN LINEUP IS AS BOLD AS IT IS EXTENSIVE.

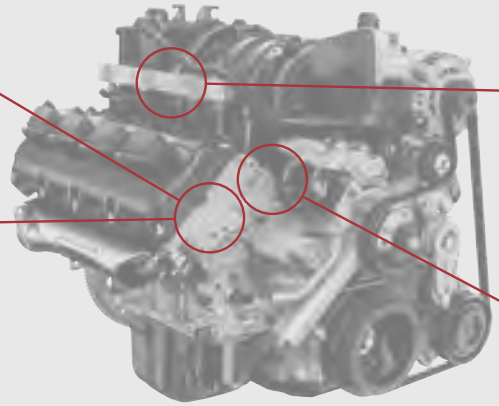

Better by design: the engineering of the hemispherical head promotes complete combustion and increased power.

The focus to achieve ever-better levels of fuel efficiency has been a hallmark of HEMI® V8 engine design—as has the pioneering development of Fuel Saver Technology.

Along with Fuel Saver Technology, the iDFSO (interactive Deceleration Fuel Shut-Off) seamlessly ceases fuel flow while decelerating, helping to achieve excellent fuel efficiency.

Aluminum cylinder heads combine with a cast-iron block and dual spark plug technology—two plugs per cylinder. The system is refined, robust and quiet, smoothing the idle and improving emissions.

5.7L HEMI V8

395 HORSEPOWER **410** LB-FT OF TORQUE **22** MPG HWY*

RAM EXCLUSIVE '14

The engineering ingenuity that created the hemispherical head is one of the major steps that led to American dominance in transportation and automobile design; the applications of this truly legendary powerplant have included everything from prototype aircraft to muscle cars. The most recent iterations give Ram 1500 pickups enviable status in the truck world.

The available 5.7-liter HEMI V8 in Ram 1500 utilizes some of the most advanced engineering protocols ever developed. Few engines enjoy the ongoing popularity and respect that the HEMI V8 has earned. Detailed at right are the overwhelming advantages that give the Ram 1500 owner beyond-capable performance for towing, hauling, highway cruising and acceleration.

SAVING FUEL EVERY MOMENT. *The 5.7L HEMI V8 in Ram 1500 incorporates the brilliant Multi-Displacement System. Also known as Fuel Saver Technology, the system invisibly shuts off four of the eight cylinders when less power is required. When you need it, you've got a mighty V8; when you're not expecting it, you've got a fuel-sipping four-cylinder under the hood.*

VARIABLE VALVE TIMING (VVT). *VVT opens and closes the valves with breathtaking precision, allowing optimal engine breathing. The technology uses fuel efficiently, and it delivers critical increased torque for towing and hauling.*

SHORT RUNNER VALVE (SRV). *The SRV, which is inside the Active Intake Manifold, controls airflow intake by changing the port length based on engine rpm, enhancing both horsepower and torque.*

5.7L HEMI V8 CAPABILITY

(WHEN PROPERLY EQUIPPED)

REGULAR CAB 6'4" BOX
9,200-LB MAX TOW CAPACITY
1,630-LB PAYLOAD CAPACITY

REGULAR CAB 8' BOX
10,450-LB MAX TOW CAPACITY
1,730-LB PAYLOAD CAPACITY

QUAD CAB® 6'4" BOX
10,400-LB MAX TOW CAPACITY
1,830-LB PAYLOAD CAPACITY

CREW CAB 5'7" BOX
10,350-LB MAX TOW CAPACITY
1,770-LB PAYLOAD CAPACITY

CREW CAB 6'4" BOX
10,300-LB MAX TOW CAPACITY
1,730-LB PAYLOAD CAPACITY

*EPA estimated 15 mpg city/22 mpg highway on Ram 1500 V8 4x2 with 8-speed transmission.

A RAM 1500 EXCLUSIVE: AVAILABLE V6 DIESEL EFFICIENCY, V8-QUALITY TORQUE.

IT ADDS UP TO OUTSTANDING PERFORMANCE. AND ONLY RAM 1500 HAS IT.
Only 2014 Ram 1500 delivers such a complete package: this available small-displacement turbo diesel mated to the class-exclusive[2] TorqueFlite® 8 automatic gives you best-in-class[5] diesel fuel economy.

YOU DEMANDED FUEL-EFFICIENT CAPABILITY. THE AVAILABLE ECODIESEL V6* TAKES EFFICIENCY TO THE NEXT LEVEL.
The clean aspect of the EcoDiesel V6 even extends to the service station. Look for a new capless Fuel Filler System that makes filling the tank cleaner and more convenient.*

Aluminum alloy pistons are lightweight with outstanding durability. The design reduces the reciprocating mass inside the engine to enhance performance and overall efficiency.

The Compact Graphite Iron (CGI) cylinder block and bedplate ensure higher strength and exceptional reliability. The CGI process creates the ideal matrix of graphite and iron for ultrahigh toughness and durability.

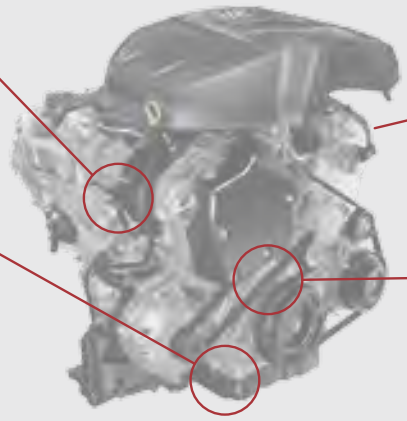

The EcoDiesel V6* uses 5W30 synthetic oil and a standard oil cooler; the combined technology contributes to a recommended 10,000-mile oil change interval—with oil status indicated in the instrument-panel cluster display.

Engineering is comprehensive, and includes an aluminum cylinder head, an electronically controlled Variable Geometry Turbocharger (VGT), high-temperature fast-acting ceramic glow plugs and high-dispersion fuel-injection nozzles.

All-New **3.0L ECODIESEL V6***

240 HORSEPOWER **420** LB-FT OF TORQUE

A POWERFUL AND CLEAN BREAK FROM CONVENTION.

RAM BEST-IN-CLASS '14

For 2014 Ram 1500, we created an all-new powertrain so good, it delivers best-in-class[5] diesel fuel economy and an impressive driving range.

Long-proven in tough commercial applications, the new Ram application of the available 3.0L EcoDiesel V6* is where Ram 1500 takes a different road than the rest of the pack: no other light-duty pickup offers a small-displacement high-performing turbo diesel mated to a class-exclusive[2] 8-speed automatic transmission. This is an all-new game with all-new rules—and this Ram just earned top-ranking stats.

Put it all together, and the 3.0L EcoDiesel V6*/TorqueFlite 8 do it right: incredible torque. Fuel-efficient performance. B20-capable. 10K oil change intervals. Top-notch DEF System. In short, this is *pure power.*

CLEAN BY DESIGN—AN INVALUABLE DUAL-FILTRATION SYSTEM.
Fuel sources vary in quality; climates across the continent are like night and day. The available 3.0L EcoDiesel V6 utilizes dual-filtration technology for greater protection against contamination, reduced injector corrosion and enhanced durability.*

CLEAN BY NATURE—WITH BEST-IN-CLASS[5] DIESEL FUEL ECONOMY.
With minimal CO_2 levels and biodiesel (B20)-approved, this is what truck buyers have demanded—and the 2014 Ram 1500 is the answer.

EXCEPTIONAL DRIVING RANGE. *The combination of available EcoDiesel V6* power and TorqueFlite 8 sophistication gives you the most miles from every tank of fuel.*

3.0L ECODIESEL V6* CAPABILITY

(WHEN PROPERLY EQUIPPED)

REGULAR CAB 8' BOX
9,200-LB MAX TOW CAPACITY
1,580-LB PAYLOAD CAPACITY

QUAD CAB® 6'4" BOX
9,050-LB MAX TOW CAPACITY
1,430-LB PAYLOAD CAPACITY

CREW CAB 5'7" BOX
8,950-LB MAX TOW CAPACITY
1,470-LB PAYLOAD CAPACITY

CREW CAB 6'4" BOX
8,900-LB MAX TOW CAPACITY
1,400-LB PAYLOAD CAPACITY

*Late availability.

WE POURED OUR HEARTS INTO THIS FOUNDATION.

The 4- and 7-pin trailer tow connectors are part of the trademark towing capability of Ram 1500—and they're standard on every model.

The structural rear bumper is rated for Class III towing and easily handles trailers up to 5,000 lb when properly equipped. For tougher trailer towing capability, the available Class IV hitch receiver bolts directly to the frame of your Ram 1500.

Reducing weight helps improve fuel efficiency: where heavy steel isn't needed, 2014 Ram 1500 employs down-gauged but stronger steel. The results give you a full-size tough pickup with weight savings that help contribute to the fuel-sipping performance.

By design, the frame is low-torsion and features fully boxed side rails—engineering that strengthens the Ram 1500 reputation for minimal noise, vibration and harshness (NVH).

The front frame unit is constructed of hydroformed tubular high-strength steel; this ultra-stiff yet light component further reduces the overall weight for Ram 1500—another very real contribution to its notably fuel-efficient operation.

Available and class-exclusive[2] Active Grille Shutters instantly adapt to speed, load and engine needs for cooling; the shutters significantly reduce aerodynamic drag to help improve fuel efficiency for Ram 1500 models.

NEW. RAM FIRST: FRONT PARK ASSIST.[7]

New for 2014 Ram 1500: technology that simplifies parking and maneuvering. The new available Front Park Ultrasonic Assist System is a first-time-ever for a full-size Ram 1500 pickup, serving as convenient aid when parallel parking. Four integrated sensors use ultrasonic waves to detect objects as far as 47.2 inches away from the front bumper, picking up the echo of a signal when it bounces off an object. Using classic echo triangulation, the system determines relative distance. Readouts located in the cluster display team up with audible chimes to notify the driver of any proximity to front and/or rear objects.

THE ELECTRONIC STABILITY CONTROL (ESC)[6] SYSTEM.

In Ram 1500, ride manners and towing control combine with safety and security. Some features of the comprehensive ESC, standard on every model, include:
AntiLock Brake System (ABS). Monitoring each wheel's speed, ABS allows back-up braking should one of the two braking circuits be compromised.
Electronic Brake Force Distribution regulates brake pressure from front to rear, minimizing stopping distances.
Traction Control regulates wheel spin. Slippage during acceleration results in throttle control to reduce torque; in extremes (e.g., when accelerating from pavement to ice) it will apply certain brakes to maintain control. It can be turned off with a console-mounted button.
Ready Alert Braking senses when the driver's foot is lifted from the accelerator, and applies an imperceptible brake force to ensure that pads and discs are lined up should an emergency stop be required.
Rain Brake Support. Activate the windshield wipers, and the brake calipers pulse against the rotor, removing water from the pads.
Hydraulic Boost Compensation. Should a failure occur in the vacuum brake booster or any related line (e.g., a rupture from tough off-roading), the brake controller will run the ABS pump; brakes will perform as normal until the failure is serviced.
Trailer Sway Control[6] detects yaw and applies selective brake pressure on the tow vehicle's opposite side to counteract and reduce the sway.
Hill Start Assist. While on hills or inclines, the system keeps your Ram 1500 stationary for two seconds after the brakes have been released.

PUT IT TO THE TEST. AFTER ALL, WE DID—TIME AFTER TIME.

In a world as bustling and busy as yours, getting away from the rattling of jackhammers and drone of the dozers is priceless; that's why the 2014 Ram 1500 is built to be quiet. Extensive testing helps reduce NVH to minimal levels, leaving only silence and comfort. Leave it to the engineers of Ram 1500 to give you both peace of mind and some peace and quiet.

Little measures that count big:
Variable Displacement A/C Compressor (VDC).
No longer a "fixed" displacement, the VDC automatically varies pumping capacity of the air conditioning compressor, lessening the load on the engine and reducing NVH and parasitic losses to help improve fuel efficiency.

New Pulse-Width Modulation Fan.
This new blower design creates virtually infinite amounts of fan speed for the HVAC System, and with reduced sound levels that make operation all but unnoticeable; interior quietness in Ram 1500 is better than ever.

New Humidity Sensor.
Formerly reserved for premium models, and now in every Ram 1500: the sensor acts to defog windows much more rapidly and works in tandem with the VDC and pulse-width modulation fan for optimal performance.

IT COULD BE ARGUED THAT EVEN OUR RELIABILITY LEADS THE CLASS.

Design, engineering, components, build quality: add it all up, and the sum is greater than the parts—leaving you with a pickup that offers impressive residual and resale values. The numbers are conclusive, with endorsements and honors that include some 34 awards for Ram in 18 months—ample proof that all the effort we put into Ram 1500 pickups lets you get the most out of yours when it's time to upgrade the ride.

TWO CLASS-EXCLUSIVE[2] SUSPENSION SYSTEMS.

THE AVAILABLE ACTIVE-LEVEL™ FOUR-CORNER AIR SUSPENSION SYSTEM.

RAM EXCLUSIVE '14

This is a level of ride quality and convenience that separates Ram from the rest. Or better said, *five levels*. The remarkable available Active-Level Four-Corner Air Suspension System features automatic leveling while under heavy payload, with five distinct operating levels (modes), all controlled with fingertip ease on the button bank.

+ OFF-ROAD 2 MODE. Provides noteworthy ground clearance for the path and trail, with the greatest angles for approach, departure and breakover. Difference from Normal ride height: +2.0 in.

+ OFF-ROAD 1 MODE. Outstanding ride balance, with an extra degree of clearance when you need it. Difference from Normal: +1.2 in, front; +0.9 in, rear.

NORMAL RIDE HEIGHT. The most comfortable balance of ride and handling for everyday driving.

– AERO MODE. Aero automatically lowers the vehicle at highway speeds, reducing aerodynamic drag and "body roll"; the improvements to fuel efficiency are measurable. Difference from Normal: –1.1 in.

– ENTRY/EXIT MODE. Automatically lowers the entire vehicle for easier ingress/egress, loading/unloading, trailer hooking/unhooking. Controlled by internal button bank or with a button on the key fob. Difference from Normal: –2.1 in, front; –1.7 in, rear.

4.1 INCHES OF LATITUDE.

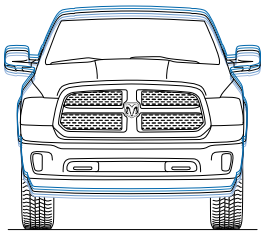

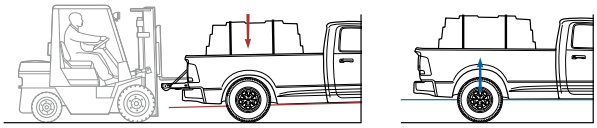

ACTIVE-LEVEL AT WORK. Pioneered by Ram 1500, this available and class-exclusive[2] asset dramatically separates this light-duty pickup from the competition. Augmenting the Four-Corner Air Suspension technology, Active-Level engineering automatically equalizes your Ram 1500 after loading; the system maintains the correct vehicle balance, a horizontal load plane and a level driving profile with a consistent headlamp-to-road angle.

FINGERTIP SUSPENSION CONTROL. With this Integrated Switch Bank, operating the available Active-Level Four-Corner Air Suspension System is a snap: go from any mode to another with a push of a button for ideal ride height for the terrain and conditions. The switch bank also controls a raft of other features, including the available Stop/Start System (not shown in image), Electronic Stability Control (ESC);[6] Tow/Haul Mode, and available features like heat and ventilation for seats, the heated steering wheel—and more.

PREMIUM KEYLESS ENTER 'N GO.™ Key fobs are now more versatile than ever. Functions range from keyless (bladeless) operation to controlling systems that include the Remote Start System, the All-Secure™ Locking System and the panic button. The fobs also remotely access the Entry/Exit Mode of the available Active-Level Four-Corner Air Suspension System on Ram 1500 models.

REPUTATIONS RIDE ON THIS.

THE MULTILINK COIL SPRING REAR SUSPENSION.

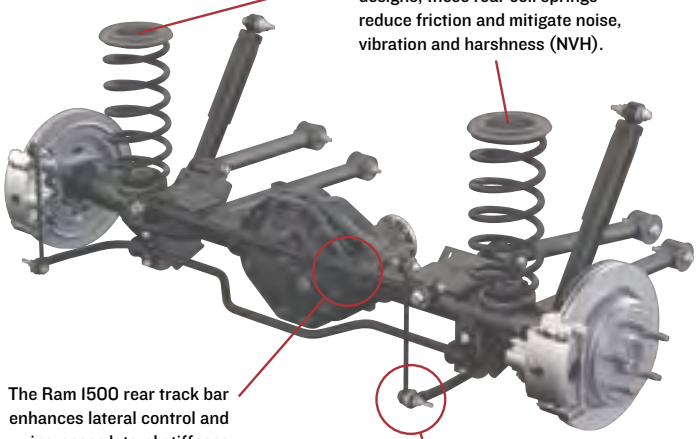

RAM EXCLUSIVE '14

IN A CLASS OF ITS OWN: CAPABILITY MEETS COMFORT. Leave the competition's leaf-spring technology where it belongs: behind you. The standard rear suspension on every 2014 Ram 1500 model is unique in the light-duty full-size pickup class. Fact: coil spring technology is the preferred suspension engineering for rail cars, offering the strength, durability, reliability and ride comfort that leaf springs just can't match. Supplying more lateral stiffness and greater vehicle control, this suspension ramps up trailer towing for dramatically increased capability.

Properly secure all cargo.

« 1500 WHEELS »

17-inch Argent Steel
Standard on Tradesman **(WFP)**

17-inch Painted Aluminum
Standard on SLT, Outdoorsman and HFE • Optional on Tradesman **(WFE)**

17-inch Chrome-Clad Aluminum
Optional on Big Horn/Lone Star and Laramie **(WFJ)**

20-inch Aluminum
Standard on Express **(WHE)**

20-inch Chrome-Clad Aluminum
Optional on Express **(WR2)**

20-inch Chrome-Clad Aluminum
Standard on Big Horn/Lone Star **(WHK)**

20-inch Polished Aluminum with Painted Pockets
Standard on Sport **(WRF)**

20-inch Chrome-Clad Aluminum
Standard on Laramie **(WRG)**

20-inch Aluminum with Polished Face and White Gold-Clad Inserts
Standard on Two-Tone Laramie Longhorn **(WRH)**

20-inch Aluminum with Polished Face and Painted Inserts
Standard on Laramie Longhorn with Available Monotone Paint **(WRJ)**

20-inch Aluminum Painted Satin Carbon with Chrome Inserts
Standard on Laramie Limited **(WRM)**

20-inch Black Painted Aluminum
Optional on Express **(WHN)** and Outdoorsman **(WHF)**

22-inch Polished Forged Aluminum
Standard on Regular Cab R/T **(WPZ)**

« 1500 TRIM LEVELS »

TRADESMAN

CABS	BEDS	SEATING
Regular Cab	6'4" Box or 8' Box	40/20/40 Bench Seat
Quad Cab®	6'4" Box	40/20/40 Bench Seat
Crew Cab	5'7" Box or 6'4" Box	40/20/40 Bench Seat

MECHANICAL

3.6L Pentastar® V6 with 8-speed automatic transmission • Electronic Stability Control (ESC)[6] System includes 4-wheel ABS, Brake Assist, Rain Brake Support, Ready Alert Braking, All-Speed Traction Control, Electronic Roll Mitigation, Hill Start Assist and Trailer Sway Control[6] • Multilink coil spring rear suspension • 26-gallon fuel tank (32-gallon fuel tank with 8-foot-box models) • Electronic part-time transfer case on 4x4 models

INTERIOR

Vinyl 40/20/40 front bench seat • Vinyl folding rear bench on Quad Cab and Crew Cab models • Vinyl floor covering • Advanced multistage front air bags[8] • Supplemental side-curtain air bags[8] • Supplemental front-seat side-mounted air bags[8] • Tilt steering wheel • Automatic headlamps • Air conditioning • Power windows and power door locks on Quad Cab and Crew Cab models • 3.5-inch LCD Electronic Vehicle Information Center (EVIC) in the instrument cluster • Uconnect® 3.0 AM/FM radio • MP3 auxiliary jack and 1.5-amp USB port

EXTERIOR

Black front and rear bumpers • Black grille surround and inserts • Black front upper fascia • Quad-lens headlamps • Bed rail caps • Spray-in bedliner • Locking tailgate • 4- and 7-pin trailer wiring harness/connectors • Class IV trailer hitch receiver • 17-inch painted steel wheels with BSW tires • Black fold-in sideview mirrors

EXPRESS

Available Black Express Package shown

CABS	BEDS	SEATING
Regular Cab	6'4" Box	40/20/40 Bench Seat
Quad Cab	6'4" Box	40/20/40 Bench Seat
Crew Cab	5'7" Box	40/20/40 Bench Seat

MECHANICAL

5.7L HEMI® V8 with 6-speed automatic transmission and heavy-duty cooling system • ESC[6] System • Multilink coil spring rear suspension • 26-gallon fuel tank • Electronic part-time transfer case on 4x4 models

INTERIOR

Vinyl 40/20/40 front bench seat • Vinyl folding rear bench on Quad Cab and Crew Cab models • Carpet floor covering • Advanced multistage front air bags[8] • Supplemental side-curtain air bags[8] • Supplemental front-seat side-mounted air bags[8] • Tilt steering wheel • Automatic headlamps • Air conditioning • Power windows and power door locks on Quad Cab and Crew Cab models • 3.5-inch LCD EVIC in the instrument cluster • Uconnect 3.0 AM/FM radio • MP3 auxiliary jack and 1.5-amp USB port

EXTERIOR

Body-color full front fascia and rear bumper • Fog lamps • Body-color grille surround with Black inserts • Quad-lens headlamps • Bed rail caps • Locking tailgate • 4- and 7-pin trailer wiring harness/connectors • 20-inch painted aluminum wheels with BSW tires • Black fold-in sideview mirrors • 4-inch chrome-tipped dual exhaust

HFE

CABS	BEDS	SEATING
Regular Cab	6'4" Box	40/20/40 Bench Seat

MECHANICAL

3.6L Pentastar® V6 with 8-speed automatic transmission • Active Grille Shutters • Stop/Start Technology • 220-amp alternator • 800-amp battery • Remote keyless entry • Electronic Stability Control (ESC)[6] System • Multilink coil spring rear suspension • 26-gallon fuel tank

INTERIOR

Cloth 40/20/40 front bench seat • Carpet floor covering • Advanced multistage front air bags[8] • Supplemental side-curtain air bags[8] • Supplemental front-seat side-mounted air bags[8] • Tilt steering wheel • Automatic headlamps • Air conditioning • 3.5-inch LCD Electronic Vehicle Information Center (EVIC) in the instrument cluster • Uconnect® 3.0 AM/FM radio • MP3 auxiliary jack and USB port

EXTERIOR

Black front and rear bumpers • Black grille surround with Black inserts • Black front upper fascia • Quad-lens headlamps • Black door handles • Bed rail caps • Locking tailgate • Tri-folding cargo bed tonneau cover • 4- and 7-pin trailer wiring harness/connectors • 17-inch painted aluminum wheels with BSW tires • Black, manual, fold-in sideview mirrors

SLT

CABS	BEDS	SEATING
Regular Cab	6'4" Box or 8' Box	Bench Seat
Quad Cab®	6'4" Box	Bench Seat
Crew Cab	5'7" Box or 6'4" Box	Bench Seat

MECHANICAL

3.6L Pentastar V6 with 8-speed automatic transmission • Active Grille Shutters • Remote keyless entry • ESC[6] System • Multilink coil spring rear suspension • 26-gallon fuel tank (32-gallon fuel tank with 8-foot-box models) • Electronic part-time transfer case on 4x4 models

INTERIOR

Cloth 40/20/40 front bench seat • Cloth folding rear bench on Quad Cab and Crew Cab models • Carpet floor covering • Advanced multistage front air bags[8] • Supplemental side-curtain air bags[8] • Supplemental front-seat side-mounted air bags[8] • Tilt steering wheel • Automatic headlamps • Air conditioning • Power windows and power door locks • 3.5-inch LCD EVIC in the instrument cluster • Uconnect 5.0 AM/FM/Bluetooth® radio with SiriusXM® Satellite Radio[9] • MP3 auxiliary jack and 2.5-amp USB port • Overhead console • Power sliding rear window on Quad Cab and Crew Cab models

EXTERIOR

Chrome front and rear bumpers • Chrome grille surround with Black inserts • Body-color front upper fascia • Quad-lens headlamps • Chrome door handles • Bed rail caps • Locking tailgate • 4- and 7-pin trailer wiring harness/connectors • 17-inch painted aluminum wheels with BSW tires • Black, power, heated, fold-in sideview mirrors

BIG HORN/LONE STAR

CABS	BEDS	SEATING
Regular Cab	6'4" Box or 8' Box	Bench Seat; Bucket Seats, Opt.
Quad Cab	6'4" Box	Bench Seat; Bucket Seats, Opt.
Crew Cab	5'7" Box or 6'4" Box	Bench Seat; Bucket Seats, Opt.

MECHANICAL

3.6L Pentastar V6 with 8-speed automatic transmission • Remote keyless entry • ESC[6] System • Multilink coil spring rear suspension • 26-gallon fuel tank • Electronic on-demand transfer case on 4x4 models

INTERIOR

Premium cloth 40/20/40 front bench seat with power driver's side • Cloth 60/40 split-folding rear bench • Carpet floor covering • 115-volt power outlet • Advanced multistage front air bags[8] • Supplemental side-curtain air bags[8] • Supplemental front-seat side-mounted air bags[8] • Leather-wrapped tilt steering wheel with audio controls • Automatic headlamps • Air conditioning • Power windows and power door locks • 3.5-inch LCD EVIC in the instrument cluster • Uconnect 5.0 AM/FM/Bluetooth radio with SiriusXM Satellite Radio[9] • MP3 auxiliary jack and 2.5-amp USB port • Overhead console • Power sliding rear window

EXTERIOR

Chrome front and rear bumpers • Fog lamps • Chrome grille surround with chrome billet inserts • Body-color front upper fascia • Quad-lens headlamps • Chrome door handles • Bed rail caps • Locking tailgate • 4- and 7-pin trailer wiring harness/connectors • Class IV trailer hitch receiver • 20-inch chrome-clad aluminum wheels with BSW tires • Black, power, heated, fold-in sideview mirrors

OUTDOORSMAN

Shown with standard Black lower

Available Monotone paint shown

CABS	BEDS	SEATING
Quad Cab	6'4" Box	Bucket Seats; Bench Seat, Opt.
Crew Cab	5'7" Box or 6'4" Box	Bucket Seats; Bench Seat, Opt.

MECHANICAL

3.6L Pentastar V6 with 8-speed automatic transmission • Remote keyless entry • ESC[6] System • Multilink coil spring rear suspension • 32-gallon fuel tank • Tow hooks • Limited-slip differential and skid plates for the transfer case and front suspension on 4x4 models • Remote Start and Security Group • Electronic part-time transfer case on 4x4 models

INTERIOR

Premium cloth front bucket seats • Power driver's seat • Full-floor center console • 115-volt power outlet • Cloth 60/40 split-folding rear bench • Carpet floor covering • Rubber all-weather floor mats • Luxury Group • Advanced multistage front air bags[8] • Supplemental side-curtain air bags[8] • Supplemental front-seat side-mounted air bags[8] • Leather-wrapped tilt steering wheel with audio controls • Automatic headlamps • Air conditioning • Power windows and power door locks • 7-inch Thin Film Transistor (TFT) premium programmable multiview display EVIC in the instrument cluster • Uconnect 8.4A AM/FM/Bluetooth/Access radio with SiriusXM Satellite Radio[9] • MP3 auxiliary jack, 2.5-amp USB port and SD card slot • Overhead console with Universal Garage Door Opener • Power sliding rear window

EXTERIOR

Two-tone paint with lower body, front bumper, rear bumper and fender flares in Black • Fog lamps • Body-color grille surround with Black inserts • Body-color front upper fascia • Quad-lens headlamps • Black door handles • Bed rail caps • Locking tailgate • 4- and 7-pin trailer wiring harness/connectors • Class IV trailer hitch receiver • 17-inch painted aluminum wheels with LT All-Terrain tires • Black power-heated/power-folding sideview mirrors with puddle lamps and turn signal indicators

SPORT

CABS	BEDS	SEATING
Regular Cab	6'4" Box	Bucket Seats
Quad Cab®	6'4" Box	Bucket Seats
Crew Cab	5'7" Box or 6'4" Box	Bucket Seats

MECHANICAL

5.7L HEMI® V8 with 8-speed automatic transmission • 3.92 axle ratio (R/T model) • Remote keyless entry • Electronic Stability Control (ESC)[6] System • ParkView® Rear Back-Up Camera[7] • Multilink coil spring rear suspension • 26-gallon fuel tank • Electronic on-demand transfer case on 4x4 models

INTERIOR

Premium cloth heated front bucket seats • Power driver's seat • Full-floor center console • 115-volt power outlet • Cloth 60/40 split-folding rear bench on Quad Cab and Crew Cab models • Carpet floor covering • Luxury Group • Advanced multistage front air bags[8] • Supplemental side-curtain air bags[8] • Supplemental front-seat side-mounted air bags[8] • Heated leather-wrapped tilt steering wheel with audio controls • Automatic headlamps • Automatic Temperature Control (ATC) • Power windows and power door locks • 7-inch Thin Film Transistor (TFT) premium programmable multiview display Electronic Vehicle Information Center (EVIC) in the instrument cluster • Uconnect® 8.4A AM/FM/Bluetooth®/Access radio with SiriusXM® Satellite Radio[9] • MP3 auxiliary jack, 2.5-amp USB port and SD card slot • Overhead console with Universal Garage Door Opener • Power sliding rear window on Quad Cab and Crew Cab models

EXTERIOR

Monochromatic paint with body-color full front fascia and rear bumper • Fog lamps • Body-color grille surround with chrome billet inserts • Premium Sport projector headlamps with LED turn signal/running lights • Body-color door handles • Bed rail caps • Locking tailgate • Premium LED Sport taillamps • 4- and 7-pin trailer wiring harness/connectors • 20-inch polished-face aluminum wheels with OWL tires • Body-color power-heated/power-folding sideview mirrors with puddle lamps and turn signal indicators • 4-inch chrome-tipped dual exhaust • R/T model-specific features (Regular Cab only): • 22-inch polished forged aluminum wheels with BSW tires • Sport performance hood • Black hex grille inserts with R/T emblem

LARAMIE

Shown with standard Silver lower

Available Monotone paint shown

CABS	BEDS	SEATING
Quad Cab	6'4" Box	Bench Seat Bucket Seats, Opt.
Crew Cab	5'7" Box or 6'4" Box	Bench Seat Bucket Seats, Opt.

MECHANICAL

3.6L Pentastar® V6 with 8-speed automatic transmission • Remote keyless entry • Security Alarm System • ESC[6] System • ParkView Rear Back-Up Camera[7] • Multilink coil spring rear suspension • 26-gallon fuel tank • Electronic on-demand transfer case on 4x4 models

INTERIOR

Leather-trimmed 40/20/40 front bench seat • Power driver's and front-passenger seats • Heated and ventilated front seats • 115-volt power outlet • Leather-trimmed 60/40 split-folding rear bench • Carpet floor covering • Advanced multistage front air bags[8] • Supplemental side-curtain air bags[8] • Supplemental front-seat side-mounted air bags[8] • Heated leather-wrapped tilt steering wheel with audio controls • Automatic headlamps • Automatic Temperature Control (ATC) • Power windows and power door locks • 7-inch TFT premium programmable multiview display EVIC in the instrument cluster • Uconnect 8.4A AM/FM/Bluetooth/Access radio with SiriusXM Satellite Radio[9] • MP3 auxiliary jack, 2.5-amp USB port and SD card slot • Premium 10-speaker Surround Sound Audio System • Overhead console with Universal Garage Door Opener • Power adjustable pedals with memory • Power sliding rear window

EXTERIOR

Two-tone paint with lower body and fender flares in Bright Silver Metallic • Chrome front and rear bumpers • Fog lamps • Chrome grille surround with chrome wave perforated inserts • Premium projector headlamps with LED turn signal/running lights • Chrome door handles • Bed rail caps • Locking tailgate • Premium LED taillamps • 4- and 7-pin trailer wiring harness/connectors • 20-inch chrome-clad aluminum wheels with BSW tires • Chrome power-heated/power-folding sideview mirrors with puddle lamps and turn signal indicators

LARAMIE LONGHORN

Shown with standard White Gold Metallic lower

Available Monotone paint shown

CABS	BEDS	SEATING
Crew Cab	5'7" Box or 6'4" Box	Bucket Seats

MECHANICAL

5.7L HEMI V8 with 8-speed automatic transmission • Remote keyless entry • Security Alarm System • Remote start • ESC[6] System • ParkSense® Front and Rear Park Assist[7] • ParkView Rear Back-Up Camera[7] • Multilink coil spring rear suspension • 32-gallon fuel tank • Electronic on-demand transfer case on 4x4 models

INTERIOR

Premium leather front bucket seats • Power driver's and front-passenger seats • Heated and ventilated front seats • Full-floor center console with leather cover • 115-volt power outlet • Premium leather heated 60/40 split-folding rear bench • Carpet floor covering • Premium floor mats with removable inserts • Advanced multistage front air bags[8] • Supplemental side-curtain air bags[8] • Supplemental front-seat side-mounted air bags[8] • Heated leather-wrapped tilt steering wheel with wood accent and audio controls • Automatic headlamps • Automatic Temperature Control (ATC) • Power windows and power door locks • Ultra-premium instrument cluster with 7-inch TFT premium programmable multiview display EVIC in the instrument cluster • Uconnect 8.4AN AM/FM/Bluetooth/Access/NAV radio with SiriusXM Satellite Radio,[9] SiriusXM Traffic[9] and SiriusXM Travel Link[10] • MP3 auxiliary jack, 2.5-amp USB port and SD card slot • Premium 10-speaker Surround Sound Audio System • Overhead console with Universal Garage Door Opener • Power adjustable pedals with memory • Power sliding rear window • LED additional interior lighting

EXTERIOR

Two-tone paint with lower body, fender flares, front bumper, rear bumper and running boards in White Gold Metallic • Fog lamps • Chrome grille surround with chrome wave mesh inserts • Unique Laramie Longhorn badging • Premium projector headlamps with LED turn signal/running lights • Chrome door handles • Bed rail caps • Spray-in bedliner • Locking tailgate • Premium LED taillamps • 4- and 7-pin trailer wiring harness/connectors • 20-inch polished aluminum wheels with White Gold-clad inserts and BSW tires • Chrome power-heated/power-folding sideview mirrors with puddle lamps and turn signal indicators • 4-inch chrome-tipped dual exhaust

LARAMIE LIMITED

CABS	BEDS	SEATING
Crew Cab	5'7" Box or 6'4" Box	Bucket Seats

MECHANICAL

5.7L HEMI V8 with 8-speed automatic transmission • Remote keyless entry • Security Alarm System • Remote start • ESC[6] System • ParkSense Front and Rear Park Assist[7] • ParkView Rear Back-Up Camera[7] • Active-Level™ Four-Corner Air Suspension System • 32-gallon fuel tank • Electronic on-demand transfer case on 4x4 models

INTERIOR

Premium leather front bucket seats • Power driver's and front-passenger seats • Heated and ventilated front seats • Full-floor center console with leather cover • 115-volt power outlet • Premium leather heated 60/40 split-folding rear bench • Carpet floor covering • Premium floor mats with removable inserts • Advanced multistage front air bags[8] • Supplemental side-curtain air bags[8] • Supplemental front-seat side-mounted air bags[8] • Heated leather-wrapped tilt steering wheel with wood accent and audio controls • Automatic headlamps • Automatic Temperature Control (ATC) • Power windows and power door locks • Ultra-premium instrument cluster with 7-inch TFT premium programmable multiview display EVIC in the instrument cluster • Uconnect 8.4AN AM/FM/Bluetooth/Access/NAV radio with SiriusXM Satellite Radio,[9] SiriusXM Traffic[9] and SiriusXM Travel Link[10] • MP3 auxiliary jack, 2.5-amp USB port and SD card slot • Premium 10-speaker Surround Sound Audio System • Overhead console with Universal Garage Door Opener • Power adjustable pedals with memory • Power sliding rear window • LED additional interior lighting

EXTERIOR

Monotone paint • Fog lamps • Chrome grille surround with chrome wave mesh inserts • Unique Laramie Limited badging • Premium projector headlamps with LED turn signal/running lights • Chrome door handles • Bed rail caps • Spray-in bedliner • Locking tailgate • Premium LED taillamps • 4- and 7-pin trailer wiring harness/connectors • 20-inch painted aluminum wheels with chrome inserts and BSW tires • Chrome power-heated/power-folding sideview mirrors with puddle lamps and turn signal indicators • 4-inch chrome-tipped dual exhaust

2014 RAM 1500 BUYER'S GUIDE

	TRADESMAN REG/QUAD/CREW	HFE REGULAR CAB	EXPRESS REG/QUAD/CREW	SLT REG/QUAD/CREW	BIG HORN/LONE STAR REG/QUAD/CREW	OUTDOORSMAN QUAD/CREW	SPORT REG/QUAD/CREW	LARAMIE QUAD/CREW	LARAMIE LONGHORN CREW CAB	LARAMIE LIMITED CREW CAB
CPOS PACKAGE	B	P	C	G	Z/Y	T	L	H	K	M
ENGINE / TRANSMISSION										
3.6L Pentastar® Flex Fuel 24V VVT V6 / 8HP45 8-speed automatic	22B	22P	—	22G	22 Z/Y	22T	—	22H	—	—
3.0L EcoDiesel V6 / 8HP70 8-speed automatic (late availability)	28B	—	—	28G	28 Z/Y	28T	—	28H	28K	28M
5.7L HEMI® V8 with VVT and Fuel Saver Technology / 65RFE 6-speed automatic	25B	—	25C	—	—	—	—	—	—	—
5.7L HEMI V8 with VVT and Fuel Saver Technology / 8HP70 8-speed automatic	26B	—	26C	26G	26 Z/Y	26T	26L	26H	26K	26M
MECHANICAL FEATURES										
ACTIVE GRILLE SHUTTERS (included with 8-speed automatic transmission)	S	S	P	S	S	S	S	S	S	S
ALTERNATOR — 180-amp	S	—	S	S	S	S	S	S	S	S
— 220-amp (requires Stop/Start System)	—	S	—	—	—	—	—	—	—	—
— 230-amp (included with EcoDiesel V6)	P	—	—	P	P	P	—	P	P	P
AXLE — 3.21 ratio (not available with EcoDiesel V6 or Crew Cab 6'4" box model)	S	S	0	S	S	S	S	S	S	S
— 3.55 ratio (included with 6-speed transmission; included with EcoDiesel V6; standard with Crew Cab 6'4" box model)	P/S	—	S	0/P	0	0	0	0	0	0
— 3.92 ratio (included with 4x2 R/T and 4x4 Outdoorsman)	0	—	0	P	0	0/S	0/S	0	0	0
— Antispin rear differential (included with R/T 4x2 and Outdoorsman 4x4)	0	0	0	P	0	0/S	0/S	0	0	0
BATTERY — 730-amp	S	—	S	S	S	S	S	S	S	S
— 800-amp (included with EcoDiesel V6)	P	S	—	P	P	P	—	P	P	P
ENGINE BLOCK HEATER	0	0	0	0	0	0	0	0	0	0
ENGINE COOLING — Heavy-duty (included with EcoDiesel V6 and HEMI V8)	P	—	S	P	P	P	S	S	S	S
— Maximum-duty (optional with EcoDiesel V6)	0	—	—	0	0	0	—	0	0	0
FUEL TANK — 26-gallon (included with EcoDiesel V6)	S	S	S	S	S	P	S	S	P	P
— 32-gallon (included with 8' box model; not available with EcoDiesel V6 or on Regular Cab short-box models; optional on 6'4" and 5'7" box models)	0/P	—	0	P	0	S	0	0	S	S
SHOCK ABSORBERS — Front, heavy-duty	S	S	S	S	S	S	S	S	S	S
— Rear, heavy-duty	S	S	S	S	S	S	S	S	S	S
— Rear, extra heavy-duty (included with Outdoorsman 4x4 only)	—	—	—	—	—	P	—	—	—	—
STABILIZER BAR — Front	S	S	S	S	S	S	S	S	S	S
— Rear (not available on Regular Cab 4x2 8' box models; included with 3.6L V6 on Regular Cab 4x2 6'4" box; included with Regular Cab R/T 4x2 6'4" box)	S	S	S	S	S	S	S/P	S	S	S
STEERING — Electronic rack and pinion	S	S	S	S	S	S	S	S	S	S
STOP/START SYSTEM — HFE models only	—	S	—	—	—	—	—	—	—	—
SUSPENSION — Front, upper and lower A-arms, coil springs, twin-tube shocks	S	S	S	S	S	S	S	S	S	0
— Rear, five-link, coil springs, twin-tube shocks	S	S	S	S	S	S	S	S	S	0
— Active-Level™ Four-Corner Air Suspension System: includes front upper and lower A-arms, air springs, twin-tube shocks, rear five-link, air springs, twin-tube shocks, air compressor, dual closed-loop system storage tanks (Quad Cab® and Crew Cab only; not available for Crew Cab 4x2 models with 6'4" box)	0	—	0	0	0	0	0	0	0	S
TRAILER HITCH — Class IV hitch receiver (included with Trailer Tow Group)	S	—	0/P	P	S	S	0/P	S	S	S
TRANSFER CASE — Electronic part-time (4x4 models only)	S	—	S	S	—	S	—	—	—	—
— Electronic on-demand (4x4 models only)	—	—	—	—	S	—	S	S	S	S
WINCH — Tire carrier	S	S	S	S	S	S	S	S	S	S
EXTERIOR FEATURES										
AIR DAM — Flexible 0-mm (Outdoorsman only)	—	—	—	—	—	S	—	—	—	—
— Flexible 18-mm (included with Active-Level Four-Corner Air Suspension System; not available on Outdoorsman)	P	—	P	P	P	—	P	P	P	S
— Flexible 38-mm (not available with Active-Level Four-Corner Air Suspension System; not available on Outdoorsman)	S	S	S	S	S	—	S	S	S	—
BED RAILS — Chrome, tubular, for 5'7" and 6'4" bed sides (not available with RamBox® System, tonneau cover or Mossy Oak® Package)	—	—	0	0	0	0	0	0	0	0
BEDLINER — Spray-in	S	0	0	—	0	0	0	0	S	S
BODY MODEL — Regular Cab 6'4" box	0	S	0	0	0	—	0	—	—	—
— Regular Cab 8' box	0	—	—	0		—	—	—	—	—
— Quad Cab 6'4" box	0	—	0	0	0	0	0	0	—	—
— Crew Cab 5'7" box	0	—	0	0	0	0	0	0	0	0
— Crew Cab 6'4" box	0	—	—	0	0	0	0	0	0	0
BODYSIDE MOLDINGS — Chrome (optional with monotone paint only on Outdoorsman and Laramie; included with Limited Appearance Group)	0	—	—	0	0	0	—	0	—	P
DOOR HANDLES — Black	S	S	S	—	—	S	—	—	—	—
— Body-color	—	—	—	—	—	—	S	—	—	—
— Chrome with body-color bezel	—	—	—	S	S	—	—	S	S	S
EXHAUST — Single rear	S	S	—	S	S	S	—	S	—	—
— Dual rear (included with HEMI V8 or EcoDiesel V6)	—	—	S	—	P	—	S	P	S	S
FOG LAMPS	—	—	S	—	S	S	S	S	S	S
GRILLE — Black surround, Black hex-link	S	S	—	—	—	—	—	—	—	—
— Chrome surround, Black hex-link (included with Exterior Appearance Group)	P	—	—	S	—	—	—	—	—	—
— Body-color surround, Black hex-link (included with R/T models)	—	—	S	—	—	S	P	—	—	—
— Body-color surround, chrome billet-perf	—	—	—	—	—	—	S	—	—	—
— Chrome surround, chrome billet-perf	—	—	—	—	S	—	—	—	—	—
— Chrome surround, chrome wave-perf	—	—	—	—	—	—	—	S	—	—
— Chrome surround, chrome wave-mesh	—	—	—	—	—	—	—	—	S	S
HEADLAMPS — Automatic	S	S	S	S	S	S	S	S	S	S
— Quad-lens halogen	S	S	S	S	S	S	—	—	—	—
— Sport bi-function halogen projector with LED turn/running lights (included with Black Express Group)	—	—	P	—	—	—	S	—	—	—
— Premium bi-function halogen projector with LED turn/running lights	—	—	—	—	—	—	—	S	S	S
— Auto High-Beam Headlamp Control (included in Convenience Group)	—	—	—	—	—	—	P	P	P	S

S = Standard. 0 = Optional. P = Part of package.
Note: some features and/or applications may be late availability.

	TRADESMAN REG/QUAD/CREW	HFE REGULAR CAB	EXPRESS REG/QUAD/CREW	SLT REG/QUAD/CREW	BIG HORN/LONE STAR REG/QUAD/CREW	OUTDOORSMAN QUAD/CREW	SPORT REG/QUAD/CREW	LARAMIE QUAD/CREW	LARAMIE LONGHORN CREW CAB	LARAMIE LIMITED CREW CAB
CPOS PACKAGE	B	P	C	G	Z/Y	T	L	H	K	M
EXTERIOR FEATURES (continued)										
MIRRORS — Manual, Black, 6 x 9-inch (Regular Cab only)	S	S	S	—	—	—	—	—	—	—
— Power, heated, folding, Black, 6 x 9-inch (included with Power and Remote Entry Group on Regular Cab Tradesman and Express models)	P/S	—	P/S	S	S	—	—	—	—	—
— Manual, folding trailer tow, Black, 7 x 11-inch (included with Trailer Tow Group; Regular cab only)	P	—	P	—	—	—	—	—	—	—
— Power, heated, auto-dimming, power-folding, Black, 6 x 9-inch; includes exterior courtesy lamps and supplemental turn signal (included with Luxury Group)	—	—	—	—	P	S	—	—	—	—
— Power, heated, power-folding, auto-dimming, body-color 6 x 9-inch; includes exterior courtesy lamps and supplemental turn signal	—	—	—	—	—	—	S	—	—	—
— Power trailer tow, manual folding, Black, 7 x 11-inch; includes exterior courtesy lamps and supplemental turn signal (included with Trailer Tow Group; not available on Regular Cab Tradesman or Express models)	P	—	P	P	P	P	P	—	—	—
— Power multifunction, heated, auto-dimming, power-folding, chrome, 6 x 9-inch; includes position memory, exterior courtesy lamps and supplemental turn signal	—	—	—	—	—	—	—	S	S	S
— Power trailer tow multifunction, heated, auto-dimming, manual folding, chrome, 7 x 11-inch, with position memory, exterior courtesy lamps and supplemental turn signal (included with Trailer Tow Group)	—	—	—	—	—	—	—	P	P	P
RUNNING BOARDS — Accent-color	—	—	—	—	—	—	—	—	S	—
SKID PLATE — Front suspension, 4x4 only (included with Protection Group)	P	—	—	—	P	S	—	P	P	—
— Transfer case, 4x4 only (included in Protection Group)	P	—	—	—	P	S	—	P	P	—
STORAGE — RamBox Cargo Management System: includes pickup box with integrated bins which are weatherproof, lockable and drainable, bed rails with four adjustable cleats and a dual-purpose bed divider/extender (5'7" and 6'4" box models only; not available with 8' box)	0	—	0	—	0	0	0	0	0	0
TAILLAMPS — Incandescent	S	S	S	S	S	S	—	—	—	—
— Sport (LED turn signals/stop lamps/running lights; included with Black Express Group)	—	—	P	—	—	—	S	—	—	—
— Premium (LED turn signals/stop lamps/running lights)	—	—	—	—	—	—	—	S	S	S
TIRES — P265/70R17 BSW All-Season	S	S	—	S	—	—	—	—	—	—
— P265/70R17 OWL All-Season (included with 17-inch aluminum chrome-clad wheel)	—	—	—	—	P	—	—	P	—	—
— LT265/70R17E OWL On-/Off-road	0	—	—	—	—	S	—	—	—	—
— P275/60R20 BSW All-Season	—	—	S	—	S	—	—	S	S	S
— P275/60R20 OWL All-Season (included with WR2 and WHE 20-inch wheels)	—	—	P	—	0	P	S	0	0	0
— P285/45R22 BSW All-Season (Regular Cab R/T 4x2 model only)	—	—	—	—	—	—	S	—	—	—
— Spare, full-size	S	S	S	S	S	S	S	S	S	S
TONNEAU COVER — Soft, tri-fold (available with or without RamBox System)	0	S	0	0	0	0	0	0	0	0
TOW HOOKS — Included with Protection Group	P	—	—	—	P	S	—	0/P	S	—
WHEELS — Steel spare	S	S	S	S	S	S	S	S	S	S
— 17 x 7-inch styled steel, painted Argent (WFP)	S	—	—	—	—	—	—	—	—	—
— 17 x 7-inch painted cast aluminum (included with Exterior Appearance Group) (WFE)	P	S	—	S	—	S	—	—	—	—
— 17 x 7-inch chrome-clad aluminum (WFJ)	—	—	—	—	0	—	—	0	—	—
— 20 x 8-inch painted Silver, aluminum (WHE)	—	—	S	—	—	—	—	—	—	—
— 20 x 8-inch painted Black, aluminum (included with Black Express Group) (WHN) (WHF)	—	—	P	—	—	0	—	—	—	—
— 20 x 8-inch chrome-clad aluminum (WHK)	—	—	—	—	S	—	—	—	—	—
— 20 x 9-inch chrome-clad aluminum (WR2)	—	—	0	—	—	—	—	—	—	—
— 20 x 9-inch aluminum, polished face, painted Silver pockets (WRF)	—	—	—	—	—	—	S	—	—	—
— 20 x 9-inch chrome-clad aluminum (WRG)	—	—	—	—	—	—	—	S	—	—
— 20 x 9-inch aluminum, multi-insert, polished, with Gold-clad accents (WRH)	—	—	—	—	—	—	—	—	S	—
— 20 x 9-inch aluminum, multi-insert, polished with Silver-clad accents (included with monotone paint) (WRJ)	—	—	—	—	—	—	—	—	P	—
— 20 x 9-inch aluminum, multi-insert, Satin Carbon painted with chrome-clad accents (WRM)	—	—	—	—	—	—	—	—	—	S
— 22 x 9-inch polished forged aluminum (Regular Cab R/T 4x2 model only) (WPZ)	—	—	—	—	—	—	S	—	—	—
INTERIOR FEATURES										
AIR CONDITIONING — Manual	S	S	S	S	S	S	S	—	—	—
— Dual-Zone Temperature Control (Quad Cab and Crew Cab only)	—	—	—	—	—	—	S	S	S	S
CLUSTER — Instrument, with 3.5-inch display screen for Electronic Vehicle Information Center (EVIC)	S	S	S	S	S	—	—	—	—	—
— Premium instrument, with 7-inch Thin Film Transistor (TFT) programmable multiview display screen for EVIC (included with Luxury Group)	—	—	—	—	P	S	S	S	—	—
— Premium Laramie Longhorn instrument, with 7-inch TFT programmable multiview display screen for EVIC	—	—	—	—	—	—	—	—	S	—
— Premium Laramie Limited instrument, with 7-inch TFT programmable multiview display screen for EVIC	—	—	—	—	—	—	—	—	—	S
CONSOLE — Full-size floor console (included with front bucket seats)	—	—	—	—	P	S	S	P	—	—
— Premium full-size floor with leather-wrapped accents	—	—	—	—	—	—	—	—	S	S
— Overhead (included with Uconnect® 5.0 radio)	P	—	P	S	S	—	—	—	—	—
— Overhead, with Universal Garage Door Opener (included with Luxury Group)	—	—	—	—	P	S	S	S	S	S
FLOOR MATS — Front and rear, rubber (Quad Cab and Crew Cab)	0	—	0	—	0	S	0	0	—	—
— Front, rubber (Regular Cab)	0	0	0	—	—	—	0	—	—	—
— Front and rear, carpeted (Quad Cab and Crew Cab; included with Popular Equipment Group)	P	—	S	S	S	—	S	S	—	—
— Front, carpeted (Regular Cab; included with Popular Equipment Group)	P	S	S	S	—	—	S	—	—	—
— Front and rear, luxury	—	—	—	—	—	—	—	—	S	S
LOAD FLOOR — Rear fold-flat (Quad Cab and Crew Cab only; included with premium cloth and leather seats)	—	—	—	—	S	S	S	S	S	S
MEMORY SYSTEM — Seats, mirrors, pedals, radio presets	—	—	—	—	—	—	—	S	S	S
PEDALS — Non-adjustable	S	S	S	S	S	S	—	—	—	—
— Power adjustable	—	—	—	—	—	—	S	—	—	—
— Power adjustable with memory	—	—	—	—	—	—	—	S	S	S

CPOS PACKAGE	B	P	C	G	Z/Y	T	L	H	K	M
	TRADESMAN REG/QUAD/CREW	HFE REGULAR CAB	EXPRESS REG/QUAD/CREW	SLT REG/QUAD/CREW	BIG HORN/LONE STAR REG/QUAD/CREW	OUTDOORSMAN QUAD/CREW	SPORT REG/QUAD/CREW	LARAMIE QUAD/CREW	LARAMIE LONGHORN CREW CAB	LARAMIE LIMITED CREW CAB
INTERIOR FEATURES (continued)										
SEATS — Manual adjusting driver and front passenger seats	S	S	S	S	—	—	—	—	—	—
— Power 10-way driver (included with *M9 and *MJ seats)	—	—	—	—	S	S	S	—	—	—
— Power 10-way driver and power 6-way passenger (included with *CJ seats)	—	—	—	—	—	—	P	—	—	—
— Power 10-way driver with memory and power 6-way passenger	—	—	—	—	—	—	—	S	S	S
— Power 2-way lumbar adjuster (driver's seat only; included with *M9 and *MJ seats)	—	—	—	—	S	S	S	S	S	S
— Seat belt, front, shoulder height-adjustable	S	S	S	S	S	S	S	S	S	S
— Heated, driver and front-passenger, includes heated steering wheel (included with Comfort Group and *CJ seats)	—	—	—	—	P	P	P	S	S	S
— Ventilated front (included with *CJ seats)	—	—	—	—	—	—	P	S	S	S
— Heated, 2nd-row, Crew Cab only (included with *GJ bucket seats)	—	—	—	—	—	—	—	P	S	S
— Vinyl 40/20/40 split-bench front seat with folding front armrest/ cup holder, floor-mounted storage tray on Crew Cab (Quad Cab® and Crew Cab models include folding rear bench seat trimmed in vinyl) (*TX)	S	—	S	—	—	—	—	—	—	—
— Cloth 40/20/40 split-bench front seat, front armrest with cup holder (Quad Cab and Crew Cab models include cloth folding rear bench seat; included with Popular Equipment Group) (*V9)	P	S	P	S	—	—	—	—	—	—
— Premium cloth-trimmed 40/20/40 split-bench front seat, front armrest with cup holder, power 10-way driver's seat, power lumbar adjuster, front center seat cushion storage, 115-volt auxiliary power outlet (Quad Cab and Crew Cab models include 60/40 split-folding rear bench seat with underseat storage and fold-flat load floor storage) (*M9)	—	—	—	—	S	0	—	—	—	—
— Premium cloth-trimmed low-back bucket seats, power 10-way driver's seat, power lumbar adjuster, full-length floor console, 115-volt auxiliary power outlet (Quad Cab and Crew Cab models include 60/40 split-folding rear bench seat trimmed in cloth with underseat storage and fold-flat load floor storage) (*MJ)	—	—	—	—	0	S	—	—	—	—
— Premium cloth/vinyl-trimmed high-back heated bucket seats, power 10-way driver's seat, power lumbar adjuster, full-length floor console, 115-volt auxiliary power outlet (Quad Cab and Crew Cab models include 60/40 split-folding rear bench seat trimmed in cloth/vinyl with underseat storage and fold-flat load floor storage) (*AJ)	—	—	—	—	—	—	S	—	—	—
— Leather-trimmed high-back, ventilated and heated bucket seats, includes power 10-way driver and power 6-way passenger, power lumbar adjuster, full-length floor console, 115-volt auxiliary power outlet (Quad Cab and Crew Cab models include 60/40 split-folding rear bench seat trimmed in vinyl with underseat storage and fold-flat load floor storage; not available on Regular Cab) (*CJ)	—	—	—	—	—	—	0	—	—	—
— Leather-trimmed 40/20/40 split-bench heated and ventilated front with power 10-way/memory for driver and power 6-way passenger, power lumbar adjuster, front center-seat cushion storage and folding center armrest with cup holder, 115-volt auxiliary power outlet (Quad Cab and Crew Cab models include 60/40 split-folding rear bench seat trimmed in vinyl with underseat storage and fold-flat load floor storage) (*VL)	—	—	—	—	—	—	—	S	—	—
— Leather-trimmed high-back, ventilated and heated bucket seats, includes power 10-way driver and power 6-way passenger, power lumbar adjuster, full-length floor console, 115-volt auxiliary power outlet and heated 2nd-row on Crew Cab models (Quad Cab and Crew Cab models include 60/40 split-folding rear bench seat trimmed in vinyl with underseat storage and fold-flat load floor storage) (*GJ)	—	—	—	—	—	—	—	0	—	—
— Premium leather with laser-etched design, high-back ventilated and heated bucket seats, includes power 10-way driver and power 6-way passenger, power lumbar adjuster, premium full-length floor console, 115-volt auxiliary power outlet, heated 2nd-row seats; includes 60/40 split-folding premium leather with laser-etched design rear bench seat with underseat storage (available only in Canyon Brown) (*XJ)	—	—	—	—	—	—	—	—	S	—
— Premium leather high-back, ventilated and heated bucket seats, includes power 10-way driver and power 6-way passenger, power lumbar adjuster, premium full-length floor console, 115-volt auxiliary power outlet, heated 2nd-row seats; includes 60/40 split-folding premium leather rear bench seat with underseat storage and fold-flat load floor storage (available in Canyon Brown or Cattle Tan) (*DJ)	—	—	—	—	—	—	—	—	0	—
— Premium leather high-back, ventilated and heated bucket seats, includes power 10-way driver and power 6-way passenger, power lumbar adjuster, premium full-length floor console, 115-volt auxiliary power outlet, heated 2nd-row seats; includes 60/40 split-folding premium leather rear bench seat with underseat storage and fold-flat load floor storage (available only in Black) (*UL)	—	—	—	—	—	—	—	—	—	S
STEERING WHEEL — Urethane	S	S	S	S	—	—	—	—	—	—
— Leather-wrapped with audio control buttons (included with Luxury Group)	—	—	—	—	S	S	S	S	—	—
— Leather-wrapped, genuine wood, heated, with audio control buttons	—	—	—	—	—	—	—	—	S	S
— Heated (included with Comfort Group)	—	—	—	—	P	P	S	S	S	S
STORAGE — Front-seat center cushion (included with *M9 and *VL seats)	—	—	—	—	S	P	—	S	—	—
— Front, behind the seats (Regular Cab only)	S	S	S	S	S	—	S	—	—	—
— Rear, in-floor bins, two with removable liners (Crew Cab only)	S	—	S	S	S	S	S	S	S	S
— Rear, underseat compartment (Quad Cab and Crew Cab models only)	S	—	S	S	S	S	S	S	S	S
— Dual glove boxes with closing doors	—	—	—	S	S	S	S	S	S	S
SUNROOF — Power (Quad Cab and Crew Cab models only)	—	—	—	—	0	0	0	0	0	0
WINDOWS — Manual (Regular Cab only)	S	S	S	—	—	—	—	—	—	—
— Power, front with driver's one-touch down (Regular Cab only; included with Power Remote Entry Group)	P	—	P	S	—	S	S	—	—	—
— Power, front and rear with driver's one-touch down and up (Quad Cab and Crew Cab models only)	S	—	S	S	S	S	S	S	S	S
— Rear backlight, fixed (standard on Regular Cab models)	S	S	S	S	S	—	S	—	—	—
— Rear backlight, sliding (Regular Cab only)	0	—	0	0	0	—	0	—	—	—
— Rear backlight, power sliding (Quad Cab and Crew Cab models only)	—	—	—	S	S	S	S	S	S	S
— Rear defroster (with fixed glass or power sliding rear backlight only)	—	—	—	—	0	0	0	0	0	S

CPOS PACKAGE	B	P	C	G	Z/Y	T	L	H	K	M
	TRADESMAN REG/QUAD/CREW	HFE REGULAR CAB	EXPRESS REG/QUAD/CREW	SLT REG/QUAD/CREW	BIG HORN/LONE STAR REG/QUAD/CREW	OUTDOORSMAN QUAD/CREW	SPORT REG/QUAD/CREW	LARAMIE QUAD/CREW	LARAMIE LONGHORN CREW CAB	LARAMIE LIMITED CREW CAB
UCONNECT® MULTIMEDIA										
CONNECTIVITY — Auxiliary input jack for mobile devices	S	S	S	S	S	S	S	S	S	S
— USB 1.5-amp fully functioning port	S	S	S	S	S	S	S	S	S	S
— USB 2.5-amp charging-only port (included with *V9, *M9, *MJ seats and Uconnect 5.0 radio)	P	P	P	S	S	S	S	S	S	S
— SD card (included with Uconnect 8.4A and 8.4AN radios)	—	—	—	P	P	S	S	S	S	S
RADIO — Uconnect 3.0 AM/FM	S	S	S	—	—	—	—	—	—	—
— Uconnect 5.0 AM/FM/Bluetooth® (included with Black Express Group)	0	0	0/P	S	S	—	—	—	—	—
— Uconnect 8.4A AM/FM/Bluetooth/ACCESS	—	—	—	0	0	S	S	S	—	—
— Uconnect 8.4AN AM/FM/Bluetooth/ACCESS/NAV	—	—	—	—	0	0	0	0	S	S
RADIO CONTROLS — Steering wheel-mounted audio controls (included with leather-wrapped steering wheel)	—	—	—	—	S	S	S	S	S	S
SINGLE DISC CD PLAYER	0	0	0	0	0	0	0	0	0	0
SIRIUSXM® SATELLITE RADIO[8] — Included with Popular Equipment Group	P	0	P	S	S	S	S	S	S	S
SIRIUSXM TRAFFIC[8] — Included with Uconnect 8.4AN radio	—	—	—	—	P	P	P	P	S	S
SIRIUSXM TRAVEL LINK[10] — Included with Uconnect 8.4AN radio	—	—	—	—	P	P	P	P	S	S
SPEAKER SYSTEM — Six, standard	S	S	S	S	S	S	S	—	—	—
— Premium I; seven speakers and eight-channel amplifier (Regular Cab only)	—	—	—	—	—	—	S	—	—	—
— Premium II; 10 speakers including a subwoofer and 12-channel amplifier (included with Sport Premium Group; Quad Cab and Crew Cab models only)	—	—	—	—	0	0	P	S	S	S
UCONNECT ACCESS[12] — Requires Uconnect 8.4A or 8.4AN radios	—	—	—	P	P	S	S	S	S	S
UCONNECT ACCESS[12] VIA MOBILE SMARTPHONE — Requires Uconnect 8.4A or 8.4AN radios	—	—	—	0	0	0	0	0	0	0
UCONNECT BLUETOOTH CONNECTIVITY — Includes hands-free phone,[11] Streaming Audio, Voice Command[11] and Text Message Reader[15] (requires Uconnect 5.0, 8.4A or 8.4AN radios)	P	P	P	S	S	S	S	S	S	S
SAFETY AND SECURITY										
AIR BAGS[8] — Advanced multistage front	S	S	S	S	S	S	S	S	S	S
— Supplemental side-curtain	S	S	S	S	S	S	S	S	S	S
— Supplemental front-seat side-mounted	S	S	S	S	S	S	S	S	S	S
BRAKES — Power-assisted 4-wheel antilock disc	S	S	S	S	S	S	S	S	S	S
ELECTRONIC STABILITY CONTROL (ESC)[6] — Includes 4-wheel ABS, Brake Assist, All-Speed Traction Control, Rainy Day Braking, Ready Alert Braking, Electronic Roll Mitigation, Hill Start Assist and Trailer Sway Control[6]	S	S	S	S	S	S	S	S	S	S
PARKSENSE® FRONT AND REAR PARK ASSIST[7] — Not available on Regular Cab (included with Rear Camera and Park Assist Group)	—	—	—	—	0	0	0	0	S	S
PARKVIEW® REAR BACK-UP CAMERA[7] — With dynamic grid lines (grid lines not available with Uconnect 3.0 radio)	0	—	0	0	0/P	0/P	S	S	S	S
REMOTE KEYLESS ENTRY WITH ALL-SECURE™ — Controls for power door locks, tailgate and RamBox® System (when equipped), illuminated entry system, panic alarm; includes two transmitters (included with Popular Equipment Group and Power and Remote Entry Group)	P	—	P	S	S	S	S	S	S	S
REMOTE START SYSTEM — Included with Remote Start and Security Group	—	—	—	—	P	S	P	0	S	S
SECURITY ALARM — Included with Remote Start and Security Group	—	—	—	—	P	S	P	S	S	S
TRAILER BRAKE CONTROL — Fully integrated electronic (included with Trailer Tow Group)	0/P	0/P	0/P	P	0/P	0/P	0/P	0/P	0/P	0/P
PACKAGES / EQUIPMENT GROUPS										
BLACK EXPRESS GROUP — Includes Popular Equipment Group, Power and Remote Entry Group, door and fender badge delete, Black tailgate badges, Sport projector head lamps, Sport LED taillamps, Black painted grille, Uconnect 5.0 radio and 20-inch Black painted wheels	—	—	0	—	—	—	—	—	—	—
COMFORT GROUP — Includes heated cloth seats and heated steering wheel	—	—	—	—	0	0	S	—	—	—
CONVENIENCE GROUP — Includes Passive Entry/Keyless Enter 'n Go™, rain-sensing wipers, Auto High-Beam Headlamp Control	—	—	—	—	—	—	0	0	0	S
EXTERIOR APPEARANCE GROUP — Includes chrome front and rear bumpers, chrome grille surround and 17-inch painted aluminum wheels	0	—	—	—	—	—	—	—	—	—
LIMITED APPEARANCE GROUP — Includes chrome body-side moldings, body-color wheel flares and chrome front and rear bumpers	—	—	—	—	—	—	—	—	—	0
LUXURY GROUP — Includes switchable dome lamp, ashtray lamp, glove box lamp, underhood lamp, illuminated vanity mirror, auto day/ night mirror, exterior mirrors with signal and puddle lamps, overhead console with Universal Garage Door Opener, leather-wrapped steering wheel, full-color 7-inch TFT programmable EVIC screen	—	—	—	—	0	S	S	—	—	—
MOSSY OAK® PACKAGE — Crew Cab 4x4 only – includes Mossy Oak logo on the seatbacks, decal on rear box side; camouflage pattern on exterior bed rail caps, tailgate caps, interior instrument panel center stack and door panel inserts; embroidered logo on four primary headrests (requires Canyon Brown/Light Frost Beige interior)	—	—	—	—	—	0	—	—	—	—
POPULAR EQUIPMENT GROUP — Includes cloth 40/20/40 bench seat, carpeted flooring, remote keyless entry, floor mats and SiriusXM Satellite Radio[9]	0	—	0	—	—	—	—	—	—	—
POWER AND REMOTE ENTRY GROUP — Includes premium vinyl door trim, remote keyless entry, foldaway Black power heated mirrors, power windows with front one-touch down and power locks (Regular Cab only)	0	—	0	—	—	—	—	—	—	—
PROTECTION GROUP — Includes tow hooks, front suspension and transfer case skid plates (4x4 models only)	0	—	—	—	0	S	—	0	0	—
REAR CAMERA AND PARK ASSIST GROUP — Includes ParkSense Front and Rear Park Assist[7] and ParkView Rear Back-Up Camera[7]	—	—	—	—	0	0	—	—	—	—
REMOTE START AND SECURITY GROUP — Includes security alarm and Remote Start System	—	—	—	—	0	S	0	—	—	—
R/T PACKAGE — Includes 3.92 axle ratio and antispin differential, P285/45R22 BSW All-Season tires, 22 x 9-inch forged polished aluminum wheels and Sport performance hood (Regular Cab 4x2 6'4" box models only)	—	—	—	—	—	—	S	—	—	—
SPORT PREMIUM GROUP — Includes Premium Surround Sound Speaker System (Quad Cab and Crew Cab only)	—	—	—	—	—	—	0	—	—	—
TRAILER TOW GROUP — Includes electronic trailer brake controller, Class IV hitch receiver and 7 x 11-inch trailer tow mirrors (included with Trailer and Traction Group)	0	—	0	P	0	0	0	0	0	0
TRAILER AND TRACTION GROUP — Includes Trailer Tow Group, 3.92 axle ratio with HEMI® V8 or EcoDiesel V6, or 3.55 axle ratio with Pentastar® V6	—	—	—	0	—	—	—	—	—	—

S = Standard. 0 = Optional. P = Part of package.
Note: some features and/or applications may be late availability.

LONGHORN

No shortcuts when it comes to luxury.

Here's to leaving nothing on the table in terms of luxury. Ram's engineers didn't put their pencils down before delivering the most comfortable Ram interiors to date.

With cab sizes varying by weight class—and with a Power Wagon® Laramie delivering astonishing off-road capability along with an unexpected level of opulence—Ram Laramie, Laramie Longhorn and new Laramie Limited models serve up a degree of sophistication and design that puts these Ram owners in an enviable class of their own.

Inside, Ram Laramie models distinguish themselves with distinctive leather-trimmed heated/ventilated seats, large and full-color multiview displays, and a heated and leather-wrapped steering wheel with audio controls. Ram Laramie Longhorn, shown above in Cattle Tan/Black, also comes with a unique laser-etched treatment in the Canyon Brown color, both with stained and burled wood accents from rustic European origins.

The next step up is the Ram Laramie Limited—featuring an all-Black interior with subtle instrument panel treatments, also in aged European wood. This is luxury graded by unquestionable capability and impressive strength of character.

MENU NAVIGATION THAT'S SECOND NATURE. REAL-TIME PERFORMANCE DATA THAT'S SECOND TO NONE. THIS IS A NEW KIND OF KNOW-HOW.

TOP: You need information. Ram is the source. The available six-ring instrument-panel cluster shown here is configured to include data for the new turbocharged EcoDiesel V6,* reflecting turbo boost numbers and exhaust figures. The system is so sophisticated, it even includes data for internal transmission temperatures, DEF status and trailer brake operation.

BOTTOM: Scroll through the color interfaces using steering wheel-mounted toggle switches; you'll find dozens of graphics relaying information on the most important mechanical and electrical functions.

We'll give a respectful nod to the past as we introduce the technology of the future: this is the truck of tomorrow. The 2014 Ram pickups come to work with each trim level presenting an individual and bold instrument panel cluster and EVIC (Electronic Vehicle Information Center) display. Select upscale models feature a six-ring instrumentation cluster with a 7-inch customizable multiview display. In every respect, it's pure Ram, all the way.

The experience of driving a pickup with this level of technology is singular: the vibrant, full-color available 7-inch multiview display Ram Control Center uses stunning Thin Film Transistor (TFT) technology for clarity typically seen on high-end flat screens. Scroll through roller-type interfaces with instant vehicle information, including graphics that represent some 34 menu options. The level of information is astonishing—and this is how you control it all.

The Ram PowerNet electrical architecture is like having a high-speed Internet connection in your Ram. The electronics convey information about virtually every facet of vehicle operation through multiple smart modules in constant communication with each other.

What it all boils down to is knowledge: the 2014 Ram models with their intuitive steering wheel-mounted toggle switches take you through dozens of different pieces of real-time information—everything from trailer data to critical pressures and powertrain operating temperatures. This is technology driving to be the best.

*Late availability.

UCONNECT® PUTS YOUR PHONE, NAV, MUSIC, INFORMATION, CLIMATE CONTROLS, AND GENERALLY THE WHOLE WORLD AT YOUR FINGERTIPS.

In a 2014 Ram pickup, staying in touch and staying in tune comes together through a comprehensive and intuitive technology: Uconnect.® This blend of state-of-the-art electronics and classic "what-works-best" ergonomics gives you an intelligent system that benchmarks where integrated technology is going. Count on full-color touch screens, clear displays, and familiar knobs and buttons for information, music, searches, NAV, interior controls and communications—either at your fingertips, or with hands-free Voice Command.[11]

UCONNECT ACCESS[12] GIVES YOU EVEN MORE.

The 2014 Ram pickups deliver outstanding technology to keep you in touch—and the next-generation connectivity from Uconnect provides it all. By registering for the included trial[13]* of Uconnect Access[12] services you get available on-demand WiFi Hotspot[14]† with the convenience of Remote Commands,[18] Voice Texting,[15] Yelp,® emergency assistance and more.

Uconnect Access services include:

Yelp	Roadside Assistance[17]	Remote Vehicle Start[18]	WiFi Hotspot[14]†
Voice Texting[15]	Stolen Vehicle Assistance	Remote Horn and Lights[18]	
9-1-1 Call[16]	Theft Alarm Notification	Remote Door Lock/Unlock[18]	

*Uconnect 8.4A: 6-month trial.
Uconnect 8.4AN: 12-month trial.
†Additional charges apply.

AVAILABLE UCONNECT RADIOS FOR RAM 1500/2500/3500

UCONNECT 3.0. With four-line LCD display; AM/FM with remote USB; iPod® integration. Available: SiriusXM® Satellite Radio[9] and remote CD player.

UCONNECT 5.0. With 5-inch full-color touch-screen display; AM/FM with remote USB; iPod integration; Bluetooth® connectivity for hands-free phone;[11] Streaming Audio, Voice Command;[11] Voice Text Reply;[15] rearview camera[7]-ready; SiriusXM Satellite Radio.[9] Available: remote CD player.

UCONNECT 8.4A. With 8.4-inch full-color touch-screen display; AM/FM with remote USB/SD; iPod integration; Bluetooth connectivity for hands-free phone;[11] Streaming Audio, Voice Command;[11] Voice Text Reply;[15] also includes dealer-activated navigation; HVAC control integration; smartphone connectivity; rearview camera[7]-ready; SiriusXM Satellite Radio.[9] Available: remote CD player.

UCONNECT 8.4AN. All features of all previous descriptions, plus navigation with one-step voice-destination entry; 3D city modeling and landmarks; digital terrain modeling; HD radio; SiriusXM Satellite Radio;[9] SiriusXM Travel Link;[10] SiriusXM Traffic.[9] Available: remote CD player.

SiriusXM® SATELLITE RADIO

SIRIUS ALL ACCESS PACKAGE. All satellite radio-equipped vehicles come with a one-year trial to the Sirius All Access Package, providing over 150 channels of the best programming for all the places life takes you.

- In your vehicle: you'll get every channel available on your radio, including all the premium programming like Howard Stern, every NFL® game, Oprah radio, MLB® Network Radio™ and more.
- On the go: with a SiriusXM Internet Radio subscription included with the All Access trial, you'll get SiriusXM on your computer, smartphone or tablet. Go to siriusxm.com/getallaccess for more information.

IF YOU'VE GOT SOMETHING TO CARRY, WE'VE GOT YOUR BACK.

Ram pickups are designed to deliver incredible hauling capability and storage capacity everywhere you look.

You've got every resource for helping friends move or hauling items for your next project. Depending on model, rear seats fold up or down for level-floor hauling and front-center seats open for valuable at-hand storage. Accessible and huge in-door bins offer serious volume, while the in-floor storage bins on Crew Cab set the benchmark for keeping valuables out of sight.

For select Ram models with 5'7" and 6'4" beds, the class-exclusive[1][2] available RamBox® Cargo Management System provides a complete package: a bed extender/divider, cargo bed rails with four adjustable tie-down cleats and the RamBox System bins—two large, illuminated, drainable and locking bed-side compartments. (There are even Authentic Accessories from Mopar® for the RamBox System created specifically for the sportsman. Check it out at mopar.com)

BELOW: *No other pickup on the planet offers it: the class-exclusive[1][2] available RamBox Cargo Management System enlarges cargo-carrying with cavernous side boxes, a bed extender/divider, cargo rails and tie-down cleats.*

Shown on next page.

TOP: *Dual glove boxes ramp up storage capacity; extra-large in-door bins hold oversize bottles, with ample space for large items.*

MIDDLE: *In-floor storage bins of Ram Crew Cab models are convenient—and drainable; seats triple-up: the front-row center position can be a seat, a fold-flat writing surface or a storage compartment with cup holders.*

BOTTOM: *Under-the-seat storage spaces are ideal when you want to stash items best left out of sight; fold-flat load floor on Crew Cab and Quad Cab® models is a built-in convenience for tools, groceries or fragile cargo.*

THE ALL-SECURE™ LOCKING SYSTEM

Versatile key fobs control another Ram advantage: the available All-Secure Locking System, which locks/unlocks all doors, the tailgate and (if equipped) both RamBox System bed-side compartments. Available fob functions include Remote Start; panic button; even the Entry/Exit Mode of the available Active-Level™ Four-Corner Air Suspension System for Ram 1500.

PREMIUM KEYLESS ENTER 'N GO™

THE CLASS-EXCLUSIVE[1][2] AVAILABLE RAMBOX CARGO MANAGEMENT SYSTEM

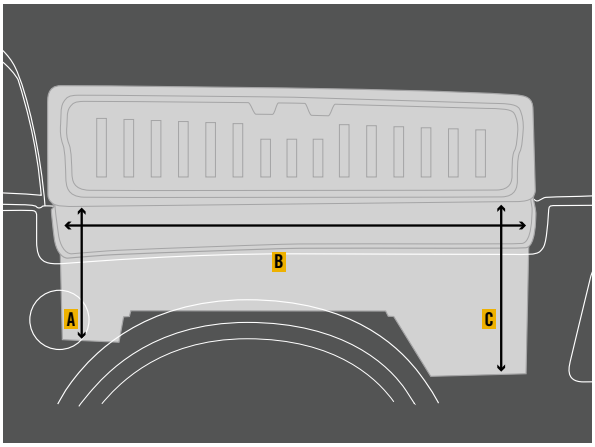

RAMBOX SYSTEM DIMENSIONS	5'7" CARGO BED (1500 MODELS ONLY)	6'4" CARGO BED
A	14.4"	18.6"
B	51.6"	60.2"
C	18.9"	18.9"

Properly secure all cargo.

« RAM PICKUP EXTERIOR COLORS » 1500, 2500, 3500 »

Black

Black Gold Pearl

Bright White

Bright Silver Metallic

Blue Streak Pearl

Deep Cherry Red Crystal Pearl

Flame Red

Maximum Steel Metallic

Granite Crystal Metallic

Prairie Pearl

True Blue Pearl

Western Brown Pearl

« RAM PICKUP INTERIOR FABRICS » 1500, 2500, 3500 »

Vinyl
Diesel Gray
1500: Tradesman and Express
2500/3500: Tradesman

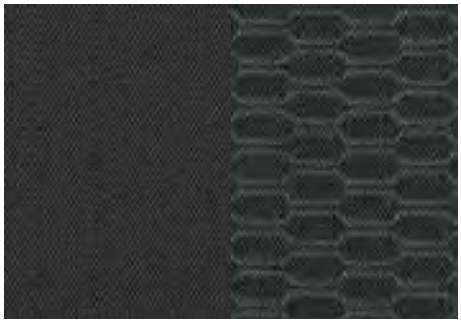

Sedoso/Embossed Cloth
Diesel Gray
1500: Tradesman, Express, SLT and HFE
2500/3500: Tradesman, SLT and Power Wagon®

Sedoso/Embossed Cloth
Canyon Brown
1500: SLT
2500/3500: SLT and Power Wagon

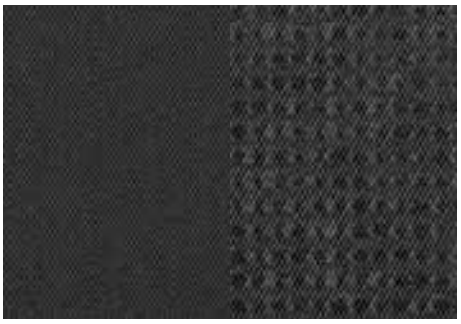

Sedoso/Carbide Cloth
Diesel Gray
1500: Big Horn/Lone Star and Outdoorsman
2500/3500: SLT, Big Horn/Lone Star, Outdoorsman and Power Wagon

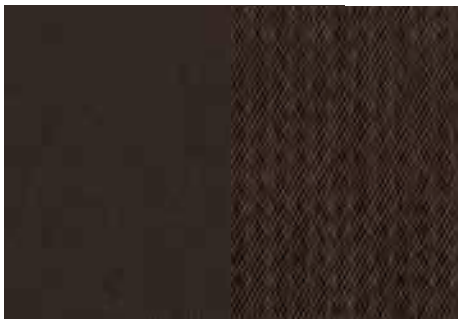

Sedoso/Carbide Cloth
Canyon Brown
1500: Big Horn/Lone Star and Outdoorsman
2500/3500: SLT, Big Horn/Lone Star, Outdoorsman and Power Wagon

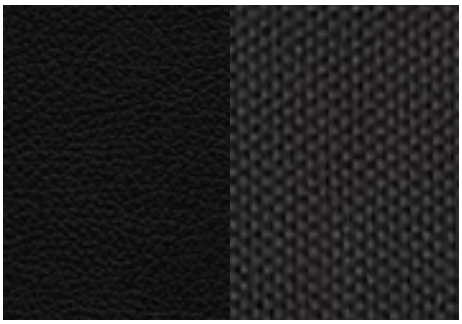

Bristol Vinyl/Sport Mesh Cloth
Black
1500: Sport

Bristol Leather/Perforated Leather Trim
Light Frost Beige
1500: Laramie
2500/3500: Laramie

Bristol Leather/Perforated Leather Trim
Black
1500: Sport and Laramie
2500/3500: Laramie

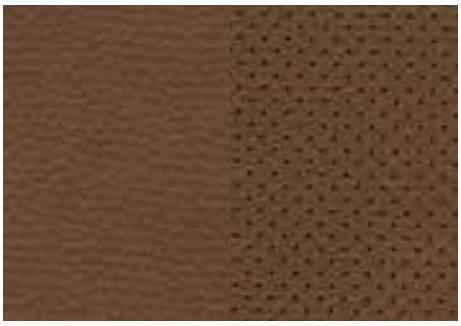

Natura Leather/Perforated Leather with Black Piping and Black Accent Stitching
Cattle Tan
1500: Laramie Longhorn
2500/3500: Laramie Longhorn

Natura Leather/Perforated Leather with Dark Saddle Piping and Tan Accent Stitching
Canyon Brown
1500: Laramie Longhorn
2500/3500: Laramie Longhorn

Natura Leather with Laser Etching/Perforated Leather with Dark Saddle Piping and Tan Accent Stitching
Canyon Brown
1500: Laramie Longhorn
2500/3500: Laramie Longhorn

Natura Leather/Perforated Leather with Medium Gray Stone Accent Stitching
Black
1500: Laramie Limited
2500/3500: Laramie Limited

Properly secure all cargo.

RAM

THE BOLDEST WORK BEST WITH A HEAVY-DUTY ATTITUDE.

It's a promise that's poured into the mold of the Heavy Duty badge itself: this is a truck that can take a beating while knocking down jobs with no punch list in sight. That's why the 2014 Ram Heavy Duty 2500/3500 models are built to put their shoulders down and deliver.

With numerous best-in-class and class-exclusive advantages where they count the most, Ram Heavy Duty 2500/3500 stand ready to serve.

These trucks have a history of arriving on job sites and ranches with a certain amount of attitude—and they have a stronger history of backing it up. The 2014 Ram 2500/3500 models build upon that rich tradition. Partnerships like the one that bore the available Cummins® Turbo Diesels help to fuel this lineup with resources. The innovations that are funneled into the Heavy Duty family help give Ram its top ranking in categories like towing capability.[1]* Sometimes, it's easier for the strong to get even stronger.

Start with an all-new gas engine that will redefine the segment—the formidable 6.4-liter HEMI® V8, available for all 2014 Ram 2500 and 3500 models. Mated to the robust 66RFE 6-speed automatic, the addition of the 6.4L HEMI V8 gives Ram more clout than ever when it comes to powertrain choices.

Front and rear suspension technology for Ram 2500 gets a major upgrade, putting it on par with levels recently pioneered by Ram 3500. Helping ensure overall handling and road manners—and improving what's already an unquestionably comfortable ride—are the unique three-link coil spring front and five-link coil spring rear suspensions. A new electronic front axle disconnect is also an upgrade for Ram 2500 4x4 models to help improve efficiency.

Even better: the 2014 Ram 2500 and 3500 Heavy Duty models now offer an available new class-exclusive[1] Auto-Level Rear Air Suspension System.† With two driver-selectable modes—specifically addressing payload and towing—this is heavy-duty capability that results in best-in-class[1] towing* for Ram 2500 and 3500 Heavy Duty models.

Tougher. Stronger. More comfortable and capable, with greater operator control and more versatile powertrain choices than ever. That's the new 2014 Ram Heavy Duty 2500/3500.

Shown on next page.

TOP: *Ram Heavy Duty 3500 Crew Cab Big Horn dually (branded in Texas as Lone Star) in Deep Cherry Red Crystal Pearl, equipped with the available 6.7-liter Cummins Turbo Diesel and the available 17-inch polished aluminum wheels.*

MIDDLE LEFT: *The working symbol of luxury: the Ram Heavy Duty 3500 Laramie Longhorn badge.*

MIDDLE RIGHT: *Ram Heavy Duty 3500 Regular Cab Tradesman dually in Bright White, with optional Chrome Appearance Group.*

BOTTOM: *Ram Heavy Duty 2500 Crew Cab Big Horn in Deep Cherry Red Crystal Pearl.*

Ram 2500: new five-link rear suspension improves comfort. Ram 2500/3500: new available dual-mode Auto-Level Rear Air Suspension System† ramps up towing* and hauling capability. Ram 2500/3500: best-in-class[1] towing*. *This is leadership.*

*When properly equipped. †Late availability.

Properly secure all cargo.

GET THE MOST WHERE IT COUNTS THE MOST.

Go in the know: select Ram models feature a full-color EVIC display with dozens of graphic interfaces covering virtually every mechanical function.

In-cabin view of the cargo bed: only Ram Heavy Duty[1] offers an available Cargo-View Camera[7] to see it all.

Available frame-mounted Gooseneck Hitch from Mopar® with easy ball removal (ball not included). Optional Fifth-Wheel/Gooseneck Prep Package includes in-bed 7-pin connector.

Available Fifth-Wheel Hitch from Mopar features sliding rails and simple-to-remove engineering.

Class-exclusive[1] Ram Active Air™ Technology switches the air-intake path to ensure optimal power and torque under all grades, climates and load/towing conditions.

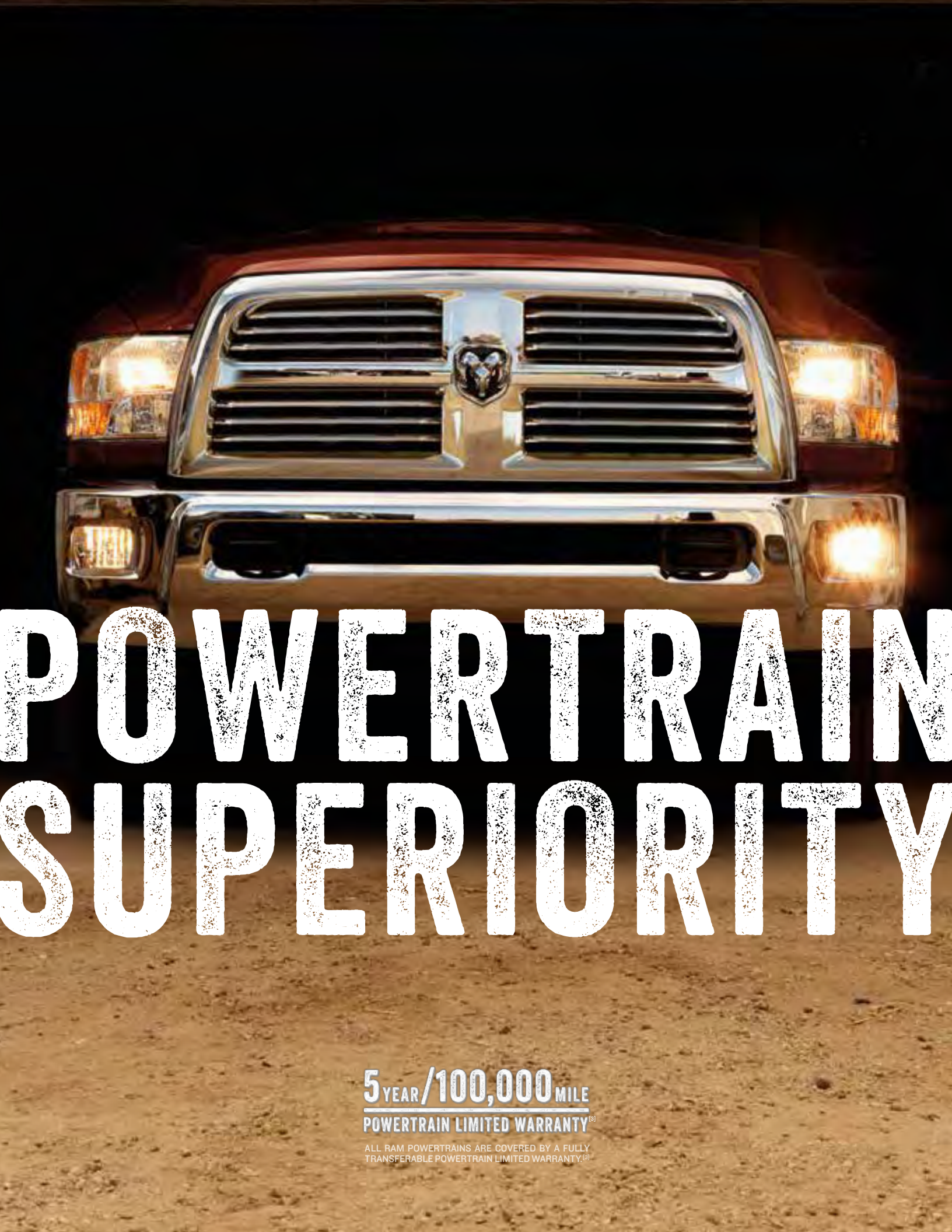
POWERTRAIN
SUPERIORITY
5 YEAR/100,000 MILE
POWERTRAIN LIMITED WARRANTY[3]
ALL RAM POWERTRAINS ARE COVERED BY A FULLY
TRANSFERABLE POWERTRAIN LIMITED WARRANTY.[3]

TOP-LEVEL TORQUE.

CUMMINS® IS IN CHARGE—WITH BEST-IN-CLASS[1] AVAILABLE TORQUE.

New for 2014 Ram 2500 models—and bringing them up to Ram 3500 electrical specs—are the available dual alternators with the Cummins Turbo Diesel. The optional in-tandem 220-amp units churn out an impressive 440 amps, with the invaluable "auto idle-up" automatically adjusting electrical output when greater power is needed.

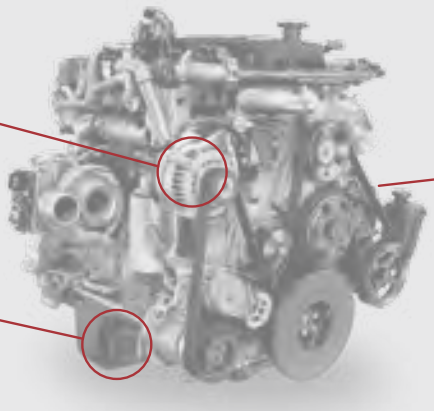

Green by design: biodiesel compatibility includes full B20 operational compliance—an advantage to every Cummins engine.

Generous—and infrequent—oil-change intervals are part of the low-cost-of-ownership equation: a best-in-class[1] 15,000 miles under normal operation.

"Low-slung"-positioned charge air cooler and faster-sequenced water pumps ramp up efficiency.

THE 6.7L CUMMINS TURBO DIESEL

385 HORSEPOWER **850** LB-FT OF TORQUE

RAM BEST-IN-CLASS '14

AVAILABLE FOR RAM 2500/3500. There's one diesel engine designed to play a pivotal role in the heavy-duty world: the Cummins Turbo Diesel. Virtually indestructible in design, the 6.7L Cummins Turbo Diesel is engineered to the tolerances, quality and durability to power semi-class big rigs. As the available diesel engine for Ram 2500 and 3500 Heavy Duty, the Cummins for 2014 is calibrated specifically for ideal job-rated use and optimal transmission output. The results for Ram Heavy Duty once again culminate in best-in-class[1] available torque for Ram 3500—the working measure for towing and hauling.

+ **Best-in-class[1] towing** for Ram 3500 is part of the Cummins legacy. Equip your truck with the available Cummins High Output Turbo Diesel, and take advantage of 850 lb-ft of torque and 385 horsepower, with towing rated at 30,000 lb. (All towing figures apply to trucks that have been properly equipped.)

+ Incredible torque for Ram 2500 comes from the available Cummins rated at 370 hp and 800 lb-ft of torque, mated to the proven 68RFE 6-speed automatic; this beefed-up powertrain configuration is also available for 2014 Ram 3500 models.

Cummins has been a leader in Turbo Diesel technology for decades—and the most recent iterations of Cummins engines prove why. Here's where you'll find three distinctive power outputs for 2014 Ram Heavy Duty. A next-generation Diesel Exhaust Fluid (DEF) System. A super-efficient Diesel Cooling System with 11-blade fan. A class-exclusive[1] "smart" diesel exhaust brake. And, of course, a Cummins High Output version that gives Ram 3500 best-in-class[1] available torque of 850 lb-ft.

Cummins + Ram Heavy Duty. The combination actually adds up to more than two million applications—the growing figure that sums up the enduring quality of this working partnership.

+ **The class-exclusive[1] G56 6-speed manual** transmission is the standard powertrain partner to the 350 hp/660 lb-ft Cummins Turbo Diesel. The 6-speed manual offers exceptional control when towing and hauling, and its availability for Ram 2500/3500 clearly separates Ram Heavy Duty from the contenders.

+ A recently revised Diesel Cooling System includes a revised Dual Radiator System; the modified engineering reduces heat by some 25% over the previous design.

TRANSMISSIONS: *The incredible output of the Cummins Turbo Diesels compel that the mated transmissions can handle the torque over the decades. Standard with the Cummins engine is the class-exclusive[1] G56 6-speed manual; available for the 370/800 Cummins is the 68RFE automatic, with the AISIN® heavy-duty 6-speed automatic transmission easily handling the best-in-class[1] 850 lb-ft of available torque generated by the Cummins High Output Turbo Diesel.*

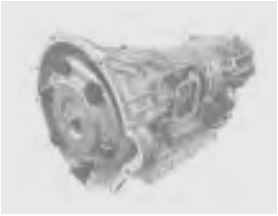

The AISIN heavy-duty 6-speed automatic is packaged with the available Cummins High Output Turbo Diesel. AISIN advantages include a sophisticated Transmission Control Module which momentarily turns off the exhaust brake (on the Cummins), and a ramped-up Tow/Haul Mode with a more aggressive downshift schedule to meet industrial-grade hauling demands.

HEAVY-DUTY LEADERSHIP.

2014 RAM HEAVY DUTY: OUTSTANDING POWERTRAIN SELECTION, OUTPUT AND CAPABILITY.

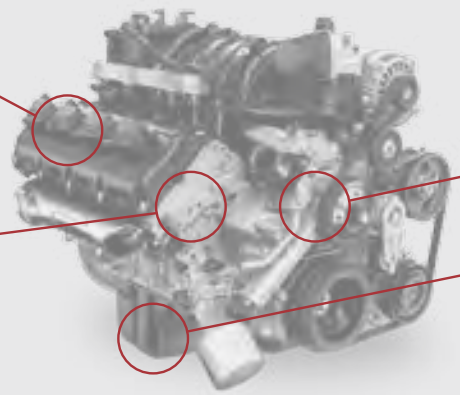

Dual-ignition technology—two spark plugs per cylinder—increases peak power and torque, reduces exhaust emissions, helps improve fuel efficiency and smoothes the idle.

Aluminum cylinder heads combine with hemispherical combustion chambers for outstanding airflow leading to indispensable power and torque.

Variable Valve Timing (VVT) improves performance and also contributes to outstanding torque output over a large rpm range.

10,000-mile oil change intervals help keep costs-of-ownership in check.

THE LEGENDARY 5.7L HEMI® V8

383 HORSEPOWER **400** LB-FT OF TORQUE

STANDARD ON RAM 2500/3500 SRW. The credentials of this extraordinary gas powerplant rank as ideal examples of technical proficiency and the limits of engineering, for the properties of the hemispherical engine head are all about power. Since its introduction, the varied applications of the hemispherical head have included WWII-era prototype aircraft (and even some tank applications), and attained unprecedented dominance during the distinctively American muscle car era. Today, with its refinement reaching new levels of fuel efficiency and power, it's the obvious choice as standard engine for the 2014 Ram Heavy Duty pickups.

+ The competitive fuel efficiency generated by the 5.7L HEMI V8 accompanies serious performance capability. For single-rear-wheel models, the 5.7-liter HEMI V8 delivers incredible standard power and torque compared to other V8 engines.

+ The incorporation of iDFSO (interactive Deceleration Fuel Shut-Off) adds to the fuel-efficient performance of the 5.7L HEMI V8. iDFSO turns off the flow of fuel during deceleration, with no noticeable change in engine performance—a real-world and bottom-line advantage to this powerplant.

TRANSMISSIONS: *The 5.7-liter HEMI V8 is mated to the long-proven 66RFE 6-speed automatic, a component that exceeds typical demands for anticipated towing and hauling. The transmission features driver-adaptive shifting, three multiple clutch packs and dual filters on a dual-stage pump; an independent lubrication cooler on the 66RFE ensures ample pressures under all driving and load conditions.*

In Ram Heavy Duty models, this iteration of the 5.7L HEMI V8 delivers every pound-foot of torque you need—with unexpected and perhaps even surprising fuel-efficient performance. Combined advantages here include VVT, outstanding transfer cases for 4x4 applications and the ideal transmission: the 66RFE 6-speed automatic. All work together to contribute to the HEMI V8 legacy: outstanding performance with fuel-sipping operation.

RAM TOUGH TRANSFER CASES

The two transfer cases utilized by the Ram Heavy Duty models more than meet the need. The BorgWarner BW 44-46 transfer case features responsive electronic shift-on-the-fly engineering, with three operating ranges, plus Neutral.

The manually activated BW 44-47 transfer case features three operating ranges, plus Neutral. Both of these impressive units offer a low-range reduction ratio of 2.64:1—an ideal ratio when off-road in a slow rock-climbing situation, or when using Ram tough 4x4 capability on steep grades. It's all about capability and performance and, in both scenarios, Ram Heavy Duty pickups are designed to excel.

MEET THE NEW BOSS.

BEST-IN-CLASS[1] GAS HORSEPOWER AND TORQUE—AND THE EFFICIENCY OF FUEL SAVER TECHNOLOGY.

HEMI 6.4 LITER

The Active Intake Manifold helps give this engine exceptional low-end torque and impressive power.

Need above-average electrical output? The 6.4L HEMI® V8 offers a gas-driven power first: available dual alternators, combining 220- and 160-amp units for a total of 380 working amps.

Count on premium performance—with wallet-friendly 87-octane unleaded gas.

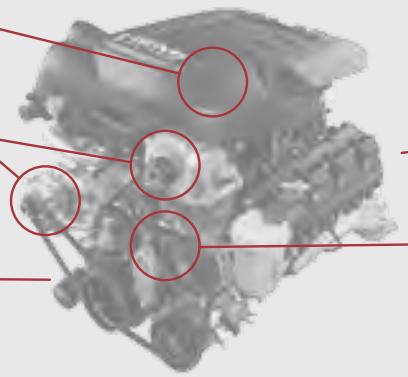

The high-wear, powdered-metal materials used in the valves and valve seats have been fully tested—in fact, to the equivalent of 200,000 customer miles of operation.

Variable Valve Timing (VVT), a high-compression ratio and dual 100,000-mile platinum spark plugs all contribute to refined and powerful performance.

THE FORMIDABLE 6.4L HEMI V8

All-New

410 HORSEPOWER **429** LB-FT OF TORQUE

RAM BEST-IN-CLASS '14

AVAILABLE FOR RAM 2500/3500. Take the proven engineering assets of the hemispherical combustion chamber, increase cylinder bores for greater displacement, and incorporate technology like Variable Valve Timing (VVT) and Fuel Saver Technology to get the most of every drop of fuel. The results give you the new available engine for Ram Heavy Duty—the 6.4-liter HEMI V8. And *that* gives 2014 Ram Heavy Duty 2500/3500 pickups a new position of absolute power, backed by a succession of commercial-grade best-in-class attributes.

The big picture? 2014 Ram Heavy Duties deliver all-new clout where clout is needed, respected—and preferred. The engines described here reflect the most comprehensive lineup in our history. The 6.4-liter HEMI V8 delivers total capability and a stunning list of best-in-class features, detailed below.

When you build trucks of this power and quality, comparisons are encouraged. Other truck manufacturers can only envy the Ram Heavy Duty lineup for powertrain selection, horsepower levels and torque output.

- Count on **best-in-class[1] gas horsepower** from the 6.4-liter HEMI V8: 410 hp (and 370 hp for 3500 Mega Cab® only). It's the ideal for acceleration and highway merging and cruising, even under the heaviest loads.
- Fuel-efficient performance is engineered into the electro-mechanical heart of the 6.4-liter HEMI V8. MDS/Fuel Saver Technology helps save fuel with no compromise or noticeable changes in engine operation.
- The corollary to that best-in-class[1] gas horsepower is **best-in-class[1] gas torque**; the 6.4-liter HEMI V8 torque levels are rated at a super-competent 429 lb-ft @ 4,000 rpm.
- Fuel Saver Technology plays a significant role towards fuel-efficient performance. While cruising at highway speeds, the engine automatically (and seamlessly) shuts off four of the eight cylinders, letting you maintain speeds with the economies of a four-cylinder.
- **Best-in-class[1] gas towing** is the natural by-product of the best-in-class[1] gas power. On Ram 2500 models with the 6.4L HEMI V8, towing is rated at 16,300 lb. On Ram 3500 DRW models, towing jumps to 16,450 lb. (All towing figures apply to trucks that have been properly equipped.)
- The cooled Exhaust Gas Recirculation (EGR) System is one of the first of its kind for a gas engine; common to diesel engines, the EGR System is designed to enhance fuel efficiency in heavy-load and uphill towing situations.
- **Best-in-class[1] payload** rounds it out. The available 6.4-liter HEMI V8 in Ram 3500 delivers a jaw-dropping payload rating of 7,320 lb (when properly equipped). This is pure capability at your service.
- The 6.4-liter HEMI V8 offers another first-time Ram application of advanced technology: Individual Cylinder Fuel Control, a diagnostic monitoring enabling air/fuel refinements and ensuring ideal mixtures for each individual cylinder.

TRANSMISSIONS: *The new 6.4-liter HEMI V8 is mated to the long-proven 66RFE 6-speed automatic, a component that exceeds typical demands for anticipated towing and hauling. The transmission features driver-adaptive shifting, three multiple clutch packs and dual filters on a dual-stage pump; an independent lubrication cooler on the 66RFE ensures ample pressures under all driving and load conditions.*

« 2500/3500 TOWING CAPABILITY »

2500 TOWING SPECS

Maximum loaded trailer weights (when properly equipped)

				2500											
				REGULAR CAB		CREW CAB						MEGA CAB®			
				8' BOX		6'4" BOX		6'4" RAMBOX®		8' BOX		6'4" BOX		6'4" RAMBOX	
	ENGINE	AXLE RATIO	GCWR	4x2	4x4	4x2	4x4	4x2	4x4	4x2	4x4	4x2	4x4	4x2	4x4
AT	5.7L HEMI® V8 CNG/ 66RFE 6-SPEED	3.73	15,000								7,230				
	5.7L HEMI V8/ 66RFE 6-SPEED	3.73	18,000	11,860	11,490	11,490	11,200	11,340	10,990	11,320	10,990	11,040	10,750	10,960	10,570
		4.10	20,000	13,860	13,490	13,490	13,200	13,340	12,990	13,320	12,990	13,040	12,750	12,960	12,570
	6.4L HEMI V8/ 66RFE 6-SPEED	3.73	19,500	13,300	12,930	12,920	12,580	12,760	12,430	12,760	12,400	12,480	12,220	12,400	12,050
		4.10	22,500	16,300	15,930	15,920	15,580	15,760	15,430	15,760	15,400	15,480	15,220	15,400	15,050
	6.7L CUMMINS® TURBO DIESEL I-6/ 68RFE 6-SPEED	3.42	25,000	17,970	17,550	17,550	17,200	17,380	17,080	17,360	17,030	17,150	16,790	17,000	16,640
MT	6.7L CUMMINS TURBO DIESEL I-6/ G56 6-SPEED	3.42	24,000	16,870	16,460	16,490	16,130	16,320	16,010	16,290	15,960	16,090	15,720	15,930	15,570

3500 TOWING SPECS

Maximum loaded trailer weights (when properly equipped)

				3500																	
				REGULAR CAB				CREW CAB								MEGA CAB					
				8' BOX		8' BOX DRW		6'4" BOX		6'4" RAMBOX		8' BOX		8' BOX DRW		6'4" BOX		6'4" RAMBOX		6'4" BOX DRW	
	ENGINE	AXLE RATIO	GCWR	4x2	4x4	4x2	4x4	4x2	4x4	4x2	4x4	4x2	4x4	4x2	4x4	4x2	4x4	4x2	4x4	4x2	4x4
AT	5.7L HEMI V8/ 66RFE 6-SPEED	3.73	18,000	11,850	11,490			11,440	11,200	11,320	11,050	11,310	10,980			11,220	10,960	11,090	10,810		
		4.10	20,000	13,850	13,490			13,440	13,200	13,320	13,050	13,310	12,980			13,220	12,960	13,090	12,810		
	6.4L HEMI V8/ 66RFE 6-SPEED	3.73	19,500	13,310	12,950	12,950	12,560	12,900	12,660	12,780	12,510	12,770	12,440	12,380	12,070	12,680	12,420	12,550	12,270	12,300	12,010
		4.10	22,500	16,310	15,950			15,900	15,660	15,780	15,510	15,770	15,440			15,680	15,420	15,550	15,270		
		4.10	23,000			16,450	16,060							15,880	15,570					15,800	15,510
	6.7L CUMMINS TURBO DIESEL I-6/ 68RFE 6-SPEED	3.42	25,000	17,910	17,580	17,550	17,200	17,520	17,240	17,390	17,080	17,380	17,030	17,000	16,660	17,200	16,880	17,070	16,740	16,820	16,480
		3.73	27,000			19,550	19,200							19,000	18,660					18,820	18,480
		4.10	30,000			22,550	22,200							22,000	21,660					21,820	21,480
	6.7L CUMMINS HIGH OUTPUT TURBO DIESEL I-6/ AISIN® 6-SPEED	3.42	25,000	17,760	17,430			17,360	17,080	17,240	16,920	17,230	16,880			17,050	16,720	16,920	16,580		
		3.42	29,000			21,400	21,040							20,840	20,500					20,670	20,320
		3.73	32,000			24,400	24,040							23,840	23,500					23,670	23,320
		4.10	37,500				29,540							29,340	29,000					29,170	28,820
		4.10	37,600			30,000															
MT	6.7L CUMMINS TURBO DIESEL I-6/ G56 6-SPEED	3.42	24,000	16,860	16,530	16,500	16,150	16,470	16,200	16,350	16,040	16,330	15,990	15,950	15,610	16,150	15,830	16,020	15,690	15,770	15,430
		3.73	26,000			18,500	18,150							17,950	17,610					17,770	17,430

AT = AUTOMATIC TRANSMISSION **MT** = MANUAL TRANSMISSION **DRW** = DUAL REAR WHEEL | WEIGHTS GIVEN IN LB. | NUMBERS IN **BLACK BOXES** REFLECT MAX RATINGS.
The maximum tongue weight for the Class V hitch receiver is limited to 1,700 lb. For trailers over 17,000 lb, a 5th-wheel or gooseneck hitch is required. For trailers over 25,000 lb, a gooseneck hitch is required. The tongue weight, including hitch equipment, for a 5th-wheel or gooseneck hitch should never exceed payload, GAWR and hitch recommendation.

2500 PAYLOAD SPECS

Maximum payload capacities (when properly equipped)

			2500											
			REGULAR CAB		CREW CAB						MEGA CAB®			
			8' BOX		6'4" BOX		6'4" RAMBOX®		8' BOX		6'4" BOX		6'4" RAMBOX	
	ENGINE	GVWR	4x2	4x4	4x2	4x4	4x2	4x4	4x2	4x4	4x2	4x4	4x2	4x4
AT	5.7L HEMI® V8 CNG/ 66RFE 6-SPEED	9,000								1,400				
	5.7L HEMI V8/ 66RFE 6-SPEED	9,000	3,030	2,660	2,660	2,370	2,510	2,160	2,490	2,160	2,210	1,920	2,130	1,740
	6.4L HEMI V8/ 66RFE 6-SPEED	10,000	3,970	3,600	3,590	3,250	3,430	3,100	3,430	3,070	3,150	2,890	3,070	2,720
	6.7L CUMMINS® TURBO DIESEL I-6/ 68RFE 6-SPEED	10,000	3,140	2,720	2,720	2,370	2,550	2,250	2,530	2,200	2,320	1,960	2,170	1,810
MT	6.7L CUMMINS TURBO DIESEL I-6/ G56 6-SPEED	10,000	3,040	2,630	2,660	2,300	2,490	2,180	2,460	2,130	2,260	1,890	2,100	1,740

3500 PAYLOAD SPECS

Maximum payload capacities (when properly equipped)

			3500																	
			REGULAR CAB				CREW CAB								MEGA CAB					
			8' BOX		8' BOX DRW		6'4" BOX		6'4" RAMBOX		8' BOX		8' BOX DRW		6'4" BOX		6'4" RAMBOX		6'4" BOX DRW	
	ENGINE	GVWR	4x2	4x4	4x2	4x4	4x2	4x4	4x2	4x4	4x2	4x4	4x2	4x4	4x2	4x4	4x2	4x4	4x2	4x4
AT	5.7L HEMI V8/ 66RFE 6-SPEED	10,100	4,120																	
		10,300		3,960																
		10,500					4,110		3,990											
		10,700						4,070		3,920										
		11,000									4,480				4,390		4,260			
		11,300										4,450				4,430		4,280		
	6.4L HEMI V8/ 66RFE 6-SPEED	10,200	4,180																	
		10,400		4,020																
		10,500					4,070		3,950											
		10,800						4,130		3,980										
		11,100									4,540									
		11,200													4,550		4,420			
		11,400										4,510				4,490		4,340		
		13,300			6,920	6,530							6,350	6,040					6,270	5,980
		13,700			7,320	6,930														
		13,900																	6,870	
		14,000											7,050	6,740						6,680
	6.7L CUMMINS TURBO DIESEL I-6/ 68RFE 6-SPEED	11,100	4,180																	
		11,500		4,250			4,190		4,060											
		11,600													3,970		3,840			
		11,700						4,110		3,950										
		12,000									4,550									
		12,300										4,500								
		12,400														4,450		4,310		
		14,000			6,720	6,370							6,170	5,830					5,990	5,650
	6.7L CUMMINS HIGH OUTPUT TURBO DIESEL I-6/ AISIN® 6-SPEED	11,100	4,030																	
		11,500		4,100			4,030		3,910											
		11,600													3,820		3,690			
		11,700						3,950		3,790										
		12,000									4,400									
		12,300										4,350								
		12,400														4,290		4,150		
		14,000			6,570	6,210							6,010	5,670					5,840	5,490
MT	6.7L CUMMINS TURBO DIESEL I-6/ G56 6-SPEED	11,100	4,130																	
		11,500		4,200			4,140		4,020											
		11,600													3,920		3,780			
		11,700						4,070		3,910										
		12,000									4,500									
		12,300										4,460								
		12,400														4,400		4,260		
		14,000			6,670	6,320							6,120	5,780					5,940	5,600

AT = AUTOMATIC TRANSMISSION **MT** = MANUAL TRANSMISSION **DRW** = DUAL REAR WHEEL | WEIGHTS GIVEN IN LB. | NUMBERS IN **BLACK BOXES** REFLECT MAX RATINGS.

OUR COURAGE STARTS WITH THE SPINE.

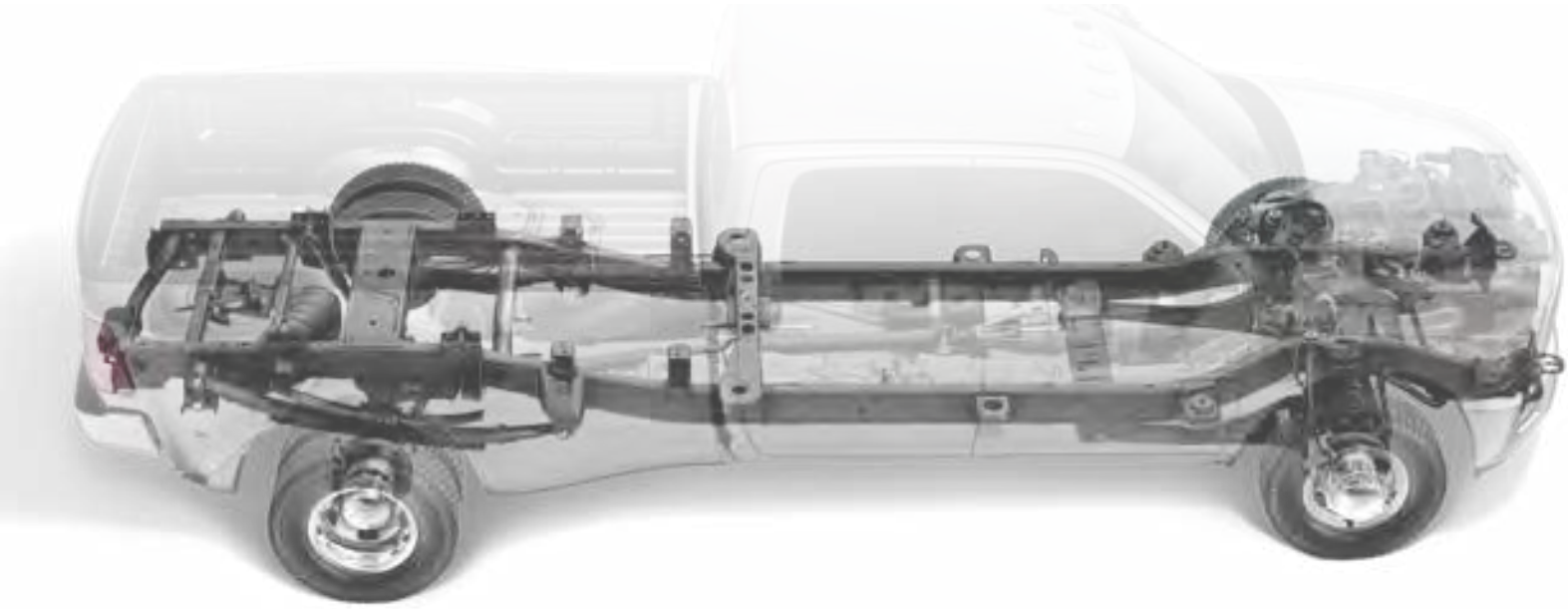

» Like Ram 3500, which introduced it in 2013, 2014 Ram 2500 models feature a new rear frame structural crossmember. It's all about providing instant capability for a fifth-wheel or gooseneck hitch—leaving no doubt how to apply those best-in-class[1] towing* numbers. New Ram Heavy Duty has serious backbone: these pickups are designed and built for the toughest towing jobs out there.

» The 2014 Ram 2500 frame now matches the recently upgraded 3500 frame, using 50 ksi steel—up from 35 ksi, with two new, additional crossmembers contributing to robust towing and hauling. Hydroformed front and rear sections supply durable strength and mass efficiencies, with rail contours ideally placed for the suspension components and ancillary mounts.

» Whether it's for work or recreation, a Ram Heavy Duty is all about mastering the toughest tasks. This frame strength measures up for all of them; so does the enhanced frame width. Resilient yet stiff, the 2014 Ram 2500 high-strength steel frame is now upgraded to 50 ksi steel strength—and it's some two inches wider than the previous frame. This stronger and larger frame gives new Ram 2500 the backbone to support new suspension systems fore and aft; you'll see it in your own confidence level and Ram tough capability—especially when towing and hauling.

» The new Ram 2500 frame is tougher, stronger and larger. Now with eight crossmembers (up from six), the 2500 frame also features newly widened rails. Extending the front rails by two total inches enables front suspension springs to be positioned slightly outboard, generating more roll stillness for an improved ride.

» All-new for 2014 Ram 2500 4x4 models is the front axle disconnect technology, which automatically disengages the front drive axle when reengaging the 4x2. First applied to the 2013 Ram 3500, the front axle disconnect helps reduce parasitic losses to help improve fuel efficiency.

» The expanded, proven ladder frame also features a new front suspension crossmember that's dramatically larger, with hydroformed front and rear sections, roll-formed center rail sections, and a new, outwardly curved position to improve rear spring and shock placement.

» New for 2014 Ram 2500—and founded on the groundbreaking introduction by Ram 3500 last year—is the unique three-link front suspension, replacing the previous independent front suspension (on 4x2 models) and the five-link suspension (on 4x4 models). The three-link front suspension also features a larger track bar, ensuring the roll stiffness required by the higher GVW ratings—up to 10,000 lb for Ram 2500 (both gas and diesel), and up to 14,000 lb for Ram 3500.

RAM 2500 CAPABILITY: STRONGER THAN EVER.

New 2014 Ram 2500 Heavy Duty: major upgrades to the frame; fully integrated new rear structural crossmember; three-link front suspension for the front axle; new electronic 4x4 front axle disconnect; the best combination of ride, handling and capability.

MAX PAYLOAD*	3,970 LB	MAX TOWING*	17,970 LB
MAX GVWR	10,000 LB	MAX GCWR	25,000 LB

RAM BEST-IN-CLASS '14

RAM 3500 CAPABILITY: BEST-IN-CLASS[1] TOWING* AT YOUR SERVICE.

New 2014 Ram 3500 Heavy Duty: unique three-link front suspension with solid axle; recently reconfigured Hotchkiss rear suspension and wider rails; large front suspension crossmember; fully integrated rear structural crossmember; in total, eight high-strength crossmembers, with high-strength hydroformed front and rear rail sections.

MAX PAYLOAD*	7,320 LB	MAX TOWING*	30,000 LB
MAX GVWR	14,000 LB	MAX GCWR	37,600 LB

RAM BEST-IN-CLASS '14

*When properly equipped.

NEW. CLASS-EXCLUSIVE:[1] 2500

THE FIVE-LINK COIL SPRING REAR SUSPENSION

IT'S THE FIRST-OF-ITS-KIND REAR SUSPENSION FOR A HEAVY-DUTY PICKUP and it's the standard for Ram 2500 models. The class-exclusive[1] five-link coil spring rear suspension features unique, multirate coil springs and heavy-duty fixed-displacement twin-tube shock absorbers; both are placed in a more outboard position that optimizes performance and minimizes noise/vibration. A huge 11.5-inch solid rear axle rounds it out for exceptional handling, especially when carrying heavy loads.

NEW. CLASS-EXCLUSIVE:[1] 2500

THE AVAILABLE AUTO-LEVEL REAR AIR SUSPENSION SYSTEM*

THE NEW AVAILABLE AUTO-LEVEL REAR AIR SUSPENSION SYSTEM* FOR RAM 2500 is based on the available Active-Level™ Four-Corner Air Suspension System introduced by Ram 1500, here in an operator-selectable two-mode configuration to accommodate the higher GCWRs of the weight class.

PAYLOAD MODE provides a level load profile by monitoring ride heights on both sides of the vehicle, adjusting for shifts in load or changes in road surfaces.

TRAILER/TOW MODE lowers the rear suspension about an inch, keeping an even alignment between the hitch and trailer tongue for a level load and a parallel, level relationship between the vehicle and trailer. The "rake" from pickup front end to rear of the trailer remains consistent, ensuring level ride and handling with superb towing and hauling characteristics.

NEW. CLASS-EXCLUSIVE:[1] 3500

THE AVAILABLE AUTO-LEVEL REAR AIR SUSPENSION SYSTEM*

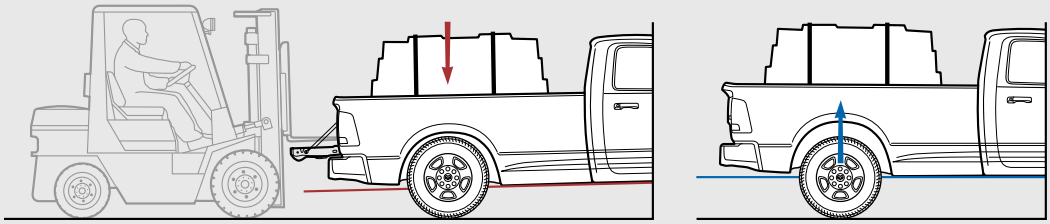

Class-pioneering, the available new Auto-Level Rear Air Suspension System* for 2014 Ram 3500 models adapts the technology introduced by Ram 1500 with its class-exclusive[2] available Active-Level™ Four-Corner Air Suspension System—here in a two-mode Rear Air Suspension System engineered for the higher GCWRs expected from Ram Heavy Duty 3500.

The engineering employed by Ram 3500 SRW and DRW models is specific to the task: a single leaf spring replaces the multi-leaf spring, with air springs mounted on top of the axle; additional links on each side of the rear axle allow the air springs and leaf springs to work in tandem for load carrying—with yet further support from the links.

As with Ram 2500, the two driver-selectable modes help improve payload and towing control.‡ In Payload Mode, the system continually monitors ride heights on both sides of the vehicle and adjusts for load shifting or changes in road surfaces; a level load—even under groaning hauling assignments—is assured.

In the Trailer/Tow Mode, the system lowers the rear suspension (about an inch) for even alignment between the hitch and trailer tongue; Trailer/Tow ensures a level load and creates a parallel, level relationship between the vehicle and trailer—for an even "rake" from the front of the pickup through the rear of the trailer.

*Late availability. ‡When properly equipped.

« 2500 » 3500 SRW WHEELS »

17-inch Steel, Argent Painted Finish
Standard on 2500 Tradesman **(WDA)**

17-inch Polished Aluminum
Standard on 2500 Power Wagon® Models **(WFV)**
(late availability)

18-inch Steel, Argent Painted Finish
Standard on 3500 Tradesman
Optional on 2500 Tradesman **(WBN)**

18-inch Steel, Chrome-Clad
Standard on SLT
Optional on Tradesman **(WBH)**

18-inch Polished Forged Aluminum
Standard on Big Horn/Lone Star and Outdoorsman
Optional on SLT **(WBJ)**

18-inch Polished Aluminum
Standard on Laramie **(WBL)**

18-inch Polished Aluminum
with White Gold Pockets
Standard on Laramie Longhorn with
Two-Tone Exterior Paint **(WBM)**

18-inch Polished Aluminum
with Silver Pockets
Standard on Laramie Longhorn with
Available Monotone Exterior Paint **(WBA)**

« 2500 » 3500 SRW WHEELS »

20-inch Painted Satin Carbon Aluminum
with Chrome Inserts
Standard on Laramie Limited
Optional on SLT, Big Horn/Lone Star, Outdoorsman and Laramie **(WRJ)**

20-inch Black Painted Aluminum
Included with Black Appearance Group **(WF3)**

20-inch Polished Aluminum
with White Gold Pockets
Optional on Laramie Longhorn
with Two-Tone Exterior Paint **(WRK)**

20-inch Polished Aluminum
with Silver Pockets
Optional on Laramie Longhorn
with Available Monotone Exterior Paint **(WRA)**

« 3500 DRW WHEELS »

17-inch Steel, Argent Painted Finish
Standard on Tradesman **(WFU)**

17-inch Steel, Chrome Finish
Standard on SLT and Big Horn/Lone Star
Optional on Tradesman **(WD4)**

17-inch Polished Aluminum
Standard on Laramie and Laramie Limited
Optional on SLT and Big Horn/Lone Star **(WF7)**

17-inch Polished Aluminum with Unique Longhorn Center Cap
Standard on Laramie Longhorn **(WF9)**

« 2500 » 3500 TRIM LEVELS »

TRADESMAN

2500

CABS	BEDS	SEATING
Regular Cab	SRW: 8' Box	40/20/40 Bench Seat
Crew Cab	SRW: 6'4" or 8' Box	40/20/40 Bench Seat

3500

CABS	BEDS		SEATING
Regular Cab	SRW: 8' Box	DRW: 8' Box	40/20/40 Bench Seat
Crew Cab	SRW: 6'4" or 8' Box	DRW: 8' Box	40/20/40 Bench Seat

MECHANICAL

2500: 5.7L HEMI® V8 with heavy-duty cooling and 66RFE 6-speed automatic transmission

3500 SRW: 5.7L HEMI V8 with heavy-duty cooling and 66RFE 6-speed automatic transmission • 7 x 11-inch trailer tow mirrors • Tow hooks

3500 DRW: 6.4L HEMI V8 with heavy-duty cooling and 66RFE 6-speed automatic transmission • 7 x 11-inch trailer tow mirrors • Tow hooks

2500/3500: Electronic Stability Control (ESC)[6] System, which includes 4-wheel ABS, Brake Assist, Rain Brake Support, Ready Alert Braking, All-Speed Traction Control, Electronic Roll Mitigation, Hill Start Assist and Trailer Sway Control[6] • Manual part-time transfer case (on 4x4 models) • 31-gallon fuel tank (6' 4" box models) • 32-gallon fuel tank (8' box models)

INTERIOR

Vinyl 40/20/40 front bench seat • Vinyl folding rear bench on Crew Cab models • Vinyl floor covering • Multistage front air bags[8] • Supplemental side-curtain air bags[8] • Supplemental front-seat side-mounted air bags[8] • Tilt steering wheel • Automatic headlamp control • Air conditioning • Power windows and door locks (on Crew Cab models) • Uconnect® 3.0 AM/FM radio • Media hub with MP3 auxiliary jack and 1.5-amp USB port • 3.5-inch Electronic Vehicle Information Center (EVIC) located in instrument panel cluster

EXTERIOR

Black front and rear bumpers • Black grille surround and inserts • Black fold-in sideview mirrors • Quad-lens halogen headlamps • Bed rail caps • Locking tailgate (Regular Cab) • Power locking tailgate (Crew Cab) • 4- and 7-pin trailer wiring harness/connectors • Class V trailer hitch receiver • 17-inch steel wheels (2500/3500 DRW) • 18-inch steel wheels (3500 SRW)

SLT

2500

CABS	BEDS	SEATING	
Regular Cab	SRW: 8' Box	40/20/40 Bench Seat	Bucket Seats, Opt.
Crew Cab	SRW: 6'4" or 8' Box	40/20/40 Bench Seat	Bucket Seats, Opt.
Mega Cab®	SRW: 6'4" Box	40/20/40 Bench Seat	Bucket Seats, Opt.

3500

CABS	BEDS		SEATING	
Regular Cab	SRW: 8' Box	DRW: 8' Box	40/20/40 Bench Seat	Bucket Seats, Opt.
Crew Cab	SRW: 6'4" or 8' Box	DRW: 8' Box	40/20/40 Bench Seat	Bucket Seats, Opt.
Mega Cab	SRW: 6'4" Box	DRW: 6'4" Box	40/20/40 Bench Seat	Bucket Seats, Opt.

MECHANICAL

2500: 5.7L HEMI V8 with heavy-duty cooling and 66RFE 6-speed automatic transmission

3500 SRW: 5.7L HEMI V8 with heavy-duty cooling and 66RFE 6-speed automatic transmission • 7 x 11-inch trailer tow mirrors • Tow hooks

3500 DRW: 6.4L HEMI V8 with heavy-duty cooling and 66RFE 6-speed automatic transmission • 7 x 11-inch trailer tow mirrors • Tow hooks

2500/3500: ESC[6] System • Electronic part-time transfer case (on 4x4 models) • Electronic trailer brake controller • Remote keyless entry • 31-gallon fuel tank (6' 4" box models) • 32-gallon fuel tank (8' box models)

INTERIOR

Cloth 40/20/40 front bench seat • Cloth folding rear bench on Crew Cab and Mega Cab models • Carpet floor covering • Multistage front air bags[8] • Supplemental side-curtain air bags[8] • Supplemental front-seat side-mounted air bags[8] • Tilt steering wheel • Automatic headlamp control • Air conditioning • Power windows and door locks • Uconnect 5.0 AM/FM/Bluetooth® radio with SiriusXM® Satellite Radio[9] • Media hub with MP3 auxiliary jack and 1.5-amp USB port • 3.5-inch EVIC located in instrument panel cluster • Overhead console • Power sliding rear window on Crew Cab and Mega Cab models

EXTERIOR

Chrome front and rear bumpers • Chrome grille surround with Black inserts • Quad-lens halogen headlamps • Chrome door handles • Black, power heated fold-in sideview mirrors • Bed rail caps • Power locking tailgate • 4- and 7-pin trailer wiring harness/connectors • Class V trailer hitch receiver • 17-inch chrome steel wheels (3500 DRW) • 18-inch chrome steel wheels (2500/3500 SRW)

BIG HORN/LONE STAR

2500

CABS	BEDS	SEATING	
Crew Cab	SRW: 6'4" or 8' Box	40/20/40 Bench Seat	Bucket Seats, Opt.
Mega Cab®	SRW: 6'4" Box	40/20/40 Bench Seat	Bucket Seats, Opt.

3500

CABS	BEDS		SEATING	
Crew Cab	SRW: 6'4" or 8' Box	DRW: 8' Box	40/20/40 Bench Seat	Bucket Seats, Opt.
Mega Cab	SRW: 6'4" Box	DRW: 6'4" Box	40/20/40 Bench Seat	Bucket Seats, Opt.

MECHANICAL

2500: 5.7L HEMI® V8 with heavy-duty cooling and 66RFE 6-speed automatic transmission

3500 SRW: 5.7L HEMI V8 with heavy-duty cooling and 66RFE 6-speed automatic transmission • 7 x 11-inch trailer tow mirrors • Tow hooks

3500 DRW: 6.4L HEMI V8 with heavy-duty cooling and 66RFE 6-speed automatic transmission • 7 x 11-inch trailer tow mirrors • Tow hooks

2500/3500: Electronic Stability Control (ESC)[6] System • Electronic part-time transfer case (on 4x4 models) • Electronic trailer brake controller • Remote keyless entry • Remote Start (requires automatic transmission) • 31-gallon fuel tank (6' 4" box models) • 32-gallon fuel tank (8' box models)

INTERIOR

Premium cloth 40/20/40 front bench seat • Cloth 60/40 split-folding rear bench seat • Carpet floor covering • Multistage front air bags[8] • Supplemental side-curtain air bags[8] • Supplemental front-seat side-mounted air bags[8] • Leather-wrapped tilt steering wheel with audio controls • 115-volt power outlet • Automatic headlamp control • Air conditioning • Power windows and door locks • Uconnect® 5.0 AM/FM/Bluetooth® touch-screen radio with SiriusXM® Satellite Radio[9] • Media hub with MP3 auxiliary jack, 1.5-amp and 2.5-amp USB ports • 3.5-inch Electronic Vehicle Information Center (EVIC) located in instrument panel cluster • Overhead console • Power sliding rear window

EXTERIOR

Quad-lens halogen headlamps • Fog lamps • Chrome front and rear bumpers • Chrome grille surround with chrome billet inserts • Black, power heated fold-in sideview mirrors • Chrome door handles • Bed rail caps • Power locking tailgate • 4- and 7-pin trailer wiring harness/connectors • Class V trailer hitch receiver • 17-inch chrome steel wheels (3500 DRW) • 18-inch polished aluminum wheels (2500/3500 SRW)

OUTDOORSMAN

2500

CABS	BEDS	SEATING	
Crew Cab	SRW: 6'4" or 8' Box	Bucket Seats	40/20/40 Bench Seat, Opt.

MECHANICAL

2500 Crew Cab 4x4 only: 5.7L HEMI V8 with heavy-duty cooling and 66RFE 6-speed automatic transmission • ESC[6] System • Remote keyless entry • Electronic part-time transfer case • Electronic trailer brake controller • Transfer case skid plate • Remote Start (requires automatic transmission) • Security alarm • 31-gallon fuel tank (6' 4" box models) • 32-gallon fuel tank (8' box models)

INTERIOR

Luxury Group • Leather-wrapped tilt steering wheel with audio controls • Premium cloth front bucket seats with center console • Power driver's seat • Cloth 60/40 split-folding rear bench • Carpet floor covering • Rubber all-weather floor mats • Multistage front air bags[8] • Supplemental side-curtain air bags[8] • Supplemental front-seat side-mounted air bags[8] • Automatic headlamp control • Air conditioning • Power windows and door locks • Uconnect 8.4A AM/FM/Bluetooth/Access touch-screen radio with SiriusXM Satellite Radio[9] • Media hub with MP3 auxiliary jack, 1.5-amp and 2.5-amp USB ports, and SD card slot • 115-volt power outlet • Premium six-ring instrument panel cluster with full-color 7-inch multiview display • Overhead console with Universal Garage Door Opener • Power sliding rear window

EXTERIOR

Two-tone paint with Black front bumper, rear bumper and fender flares • Body-color grille surround with Black inserts • Black door handles • Black, power heated fold-in sideview mirrors with puddle lamps and turn signal indicators • Fog lamps • Quad-lens halogen headlamps • Bed rail caps • Power locking tailgate • 4- and 7-pin trailer wiring harness/connectors • Class V trailer hitch receiver • Tow hooks • 18-inch polished aluminum wheels

POWER WAGON®

Late availability on all Power Wagon models

2500

CABS	BEDS	SEATING
Crew Cab	SRW: 6'4" Box	40/20/40 Bench Seat

MECHANICAL

2500 Crew Cab 4x4 only: 6.4L HEMI V8 with heavy-duty cooling and 66RFE 6-speed automatic transmission • 180-amp alternator • Tow hooks • Skid plates for the fuel tank and transfer case • Electronic disconnecting front stabilizer (or sway) bar • Front and rear electronic locking differentials • 4.10:1 axle ratio • 12,000-lb WARN® winch • 31-gallon fuel tank • Remote keyless entry • ESC[6] System • Manual part-time transfer case • Electronic trailer brake controller

INTERIOR

Cloth front 40/20/40 bench seat • Cloth folding rear bench • Tilt steering wheel • Carpet floor covering • Multistage front air bags[8] • Supplemental side-curtain air bags[8] • Supplemental front-seat side-mounted air bags[8] • Automatic headlamp control • Air conditioning • Power windows and door locks • Uconnect 5.0 AM/FM/Bluetooth touch-screen radio with SiriusXM Satellite Radio[9] • Media hub with MP3 auxiliary jack, 1.5-amp and 2.5-amp USB ports • 3.5-inch EVIC in the instrument panel cluster • Overhead console • Power sliding rear window

EXTERIOR

Two-tone paint with front and rear chrome bumpers • Black wheel flares • Chrome grille surround with chrome billet inserts • Black, power heated fold-in sideview mirrors • Black door handles • Black bed rail caps • Fog lamps • Premium 70-mm projector headlamps • Premium LED taillamps • Power locking tailgate • Power Wagon Decal Package • Class V trailer hitch receiver • 4- and 7-pin trailer wiring harness/connectors • 17-inch forged aluminum wheels with 33-inch LT All-Terrain tires

POWER WAGON TRADESMAN

MECHANICAL IN ADDITION TO TRADESMAN EQUIPMENT

2500 Crew Cab 4x4 with 6'4" box only: 6.4L HEMI V8 with heavy-duty cooling and 66RFE 6-speed automatic transmission • 180-amp alternator • Skid plates for the fuel tank and transfer case • Electronic disconnecting front stabilizer (or sway) bar • Front and rear electronic locking differentials • 4.10:1 axle ratio • 12,000-lb WARN winch • ESC[6] System • Manual part-time transfer case • 31-gallon fuel tank

EXTERIOR IN ADDITION TO TRADESMAN EQUIPMENT

Monotone paint with chrome front and rear bumpers • Fog lamps • Black grille surround and inserts • Black headlamp filler panel • Black wheel flares • Power Wagon tailgate decal • 17-inch forged aluminum wheels with 33-inch LT All-Terrain tires

POWER WAGON LARAMIE

MECHANICAL IN ADDITION TO LARAMIE TRIM (NEXT PAGE)

2500 Crew Cab 4x4 with 6'4" box only: 6.4L HEMI V8 with 66RFE 6-speed automatic transmission • 180-amp alternator • Skid plates for the fuel tank and transfer case • Electronic disconnecting front stabilizer (or sway) bar • Front and rear electronic locking differentials • 4.10:1 axle ratio • 12,000-lb WARN winch • ESC[6] System • Manual part-time transfer case • 31-gallon fuel tank

EXTERIOR IN ADDITION TO LARAMIE TRIM (NEXT PAGE)

Monotone painted body and wheel flares • Power Wagon tailgate badge • 17-inch forged aluminum wheels with 33-inch LT All-Terrain tires

LARAMIE

2500

CABS	BEDS	SEATING
Crew Cab	SRW: 6'4" or 8' Box	40/20/40 Bench Seat; Bucket Seats, Opt.
Mega Cab®	SRW: 6'4" Box	40/20/40 Bench Seat; Bucket Seats, Opt.

3500

CABS	BEDS	SEATING
Crew Cab	SRW: 6'4" or 8' Box; DRW: 8' Box	40/20/40 Bench Seat; Bucket Seats, Opt.
Mega Cab	SRW: 6'4" Box; DRW: 6'4" Box	40/20/40 Bench Seat; Bucket Seats, Opt.

MECHANICAL

2500: 5.7L HEMI® V8 with heavy-duty cooling and 66RFE 6-speed automatic transmission

3500 SRW: 5.7L HEMI V8 with heavy-duty cooling and 66RFE 6-speed automatic transmission • 7 x 11-inch trailer tow mirrors • Tow hooks

3500 DRW: 6.4L HEMI V8 with heavy-duty cooling and 66RFE 6-speed automatic transmission • 7 x 11-inch trailer tow mirrors • Tow hooks

2500/3500: Electronic Stability Control (ESC)[6] System • ParkSense® Rear Park Assist[7] • Electronic part-time transfer case (on 4x4 models) • Electronic trailer brake controller • Remote keyless entry • ParkView® Rear Back-Up Camera[7] • Security alarm • 31-gallon fuel tank (6' 4" box models) • 32-gallon fuel tank (8' box models)

INTERIOR

Leather-trimmed heated and ventilated front 40/20/40 bench seat • Power driver and front-passenger seats • Leather-trimmed 60/40 split-folding rear bench • 115-volt power outlet • Carpet floor covering • Multistage front air bags[8] • Supplemental side-curtain air bags[8] • Supplemental front-seat side-mounted air bags[8] • Heated leather-wrapped tilt steering wheel with audio controls • Automatic headlamp control • Automatic Temperature Control • Power windows and door locks • Uconnect® 8.4A AM/FM/Bluetooth®/Access touch-screen radio with SiriusXM® Satellite Radio[9] • Media hub with MP3 auxiliary jack, 1.5-amp and 2.5-amp USB ports, and SD card slot • Premium 10-speaker Surround Sound Audio System • Premium six-ring instrument panel cluster with full-color 7-inch multiview display • Overhead console with Universal Garage Door Opener • Power sliding rear window

EXTERIOR

Two-tone paint treatment with lower body and wheel flares in Bright Silver Metallic • Chrome front and rear bumpers • Chrome door handles • Chrome grille surround with chrome wave inserts • Chrome, power heated fold-in sideview mirrors with puddle lamps and turn signal indicators • Premium 70-mm projector headlamps • Premium LED taillamps • Fog lamps • Bed rail caps • Power locking tailgate • 4- and 7-pin trailer wiring harness/connectors • Class V trailer hitch receiver • 17-inch polished aluminum wheels (3500 DRW) • 18-inch polished aluminum wheels (2500/3500 SRW)

LARAMIE LONGHORN

2500

CABS	BEDS	SEATING
Crew Cab	SRW: 6'4" or 8' Box	Bucket Seats
Mega Cab	SRW: 6'4" Box	Bucket Seats

3500

CABS	BEDS	SEATING
Crew Cab	SRW: 6'4" or 8' Box; DRW: 8' Box	Bucket Seats
Mega Cab	SRW: 6'4" Box; DRW: 6'4" Box	Bucket Seats

MECHANICAL

2500: 5.7L HEMI V8 with heavy-duty cooling and 66RFE 6-speed automatic transmission

3500 SRW: 5.7L HEMI V8 with heavy-duty cooling and 66RFE 6-speed automatic transmission • 7 x 11-inch trailer tow mirrors

3500 DRW: 6.4L HEMI V8 with heavy-duty cooling and 66RFE 6-speed automatic transmission • 7 x 11-inch trailer tow mirrors

2500/3500: Tow hooks • ESC[6] System • ParkSense Rear Park Assist[7] • ParkView Rear Back-Up Camera[7] • Electronic part-time transfer case (on 4x4 models) • Electronic trailer brake controller • Remote keyless entry • Security alarm • Remote Start (requires automatic transmission) • 31-gallon fuel tank (6' 4" box models) • 32-gallon fuel tank (8' box models)

INTERIOR

Premium leather front bucket seats • Power driver and front-passenger seats • Heated and ventilated front seats • Full-floor center console with leather console cover • 115-volt power outlet • Premium leather heated 60/40 split-folding rear bench • Carpet floor covering • Premium floor mats with removable inserts • Multistage front air bags[8] • Supplemental side-curtain air bags[8] • Supplemental front-seat side-mounted air bags[8] • Heated leather-wrapped tilt steering wheel with wood accent and audio controls • Automatic headlamp control • Automatic Temperature Control • Power windows and door locks • Uconnect 8.4AN AM/FM/Bluetooth/NAV/Access touch-screen radio with SiriusXM Satellite Radio,[9] SiriusXM Traffic[9] and SiriusXM Travel Link[10] • Media hub with MP3 auxiliary jack, 1.5-amp and 2.5-amp USB ports, and SD card slot • Premium 10-speaker Surround Sound Audio System • Premium six-ring instrument panel cluster with full-color 7-inch multiview display • Overhead console with Universal Garage Door Opener • Power sliding rear window

EXTERIOR

Two-tone paint treatment with lower body, wheel flares, front bumper, rear bumper and running boards in White Gold Metallic • Premium 70-mm projector headlamps • Premium LED taillamps • Fog lamps • Chrome grille surround with chrome wave mesh inserts • Chrome, power heated fold-in sideview mirrors with puddle lamps and turn signal indicators • Unique Laramie Longhorn badging • Chrome door handles • Black bed rail caps • Spray-in bedliner • Power locking tailgate • 4- and 7-pin trailer wiring harness/connectors • Class V trailer hitch receiver • 17-inch polished aluminum wheels (3500 DRW) • 18-inch polished aluminum wheels (2500/3500 SRW)

LARAMIE LIMITED

2500

CABS	BEDS	SEATING
Crew Cab	SRW: 6'4" or 8' Box	Bucket Seats
Mega Cab	SRW: 6'4" Box	Bucket Seats

3500

CABS	BEDS	SEATING
Crew Cab	SRW: 6'4" or 8' Box; DRW: 8' Box	Bucket Seats
Mega Cab	SRW: 6'4" Box; DRW: 6'4" Box	Bucket Seats

MECHANICAL

2500: 5.7L HEMI V8 with heavy-duty cooling and 66RFE 6-speed automatic transmission

3500 SRW: 5.7L HEMI V8 with heavy-duty cooling and 66RFE 6-speed automatic transmission • 7 x 11-inch trailer tow mirrors

3500 DRW: 6.4L HEMI V8 with heavy-duty cooling and 66RFE 6-speed automatic transmission • 7 x 11-inch trailer tow mirrors

2500/3500: Tow hooks • ESC[6] System • ParkSense Rear Park Assist[7] • ParkView Rear Back-Up Camera[7] • Electronic part-time transfer case (on 4x4 models) • Electronic trailer brake controller • Remote keyless entry • Security alarm • Remote Start (requires automatic transmission) • 31-gallon fuel tank (6' 4" box models) • 32-gallon fuel tank (8' box models)

INTERIOR

See Laramie Longhorn specs, at left

EXTERIOR

Monotone paint treatment • Premium 70-mm projector headlamps • Premium LED taillamps • Fog lamps • Chrome grille surround with chrome wave mesh inserts • Chrome, power heated fold-in sideview mirrors with puddle lamps and turn signal indicators • Unique Laramie Limited badging • Chrome door handles • Black bed rail caps • Spray-in bedliner • Power locking tailgate • RamBox® Cargo Management System • 4- and 7-pin trailer wiring harness/connectors • Class V trailer hitch receiver • 17-inch polished aluminum wheels (3500 DRW) • 20-inch painted aluminum wheels with chrome pockets (2500/3500 SRW)

2014 RAM 2500/3500 BUYER'S GUIDE

CPOS PACKAGE	TRADESMAN REG/CREW 2TA	POWER WAGON® TRADESMAN CREW 2TB	SLT REG/CREW/MEGA 2TG	BIG HORN/LONE STAR CREW/MEGA 2TZ/2TY	OUTDOORSMAN CREW 2TT	POWER WAGON CREW 2TP	LARAMIE CREW/MEGA 2TH	POWER WAGON 2TJ	LARAMIE CREW 2TK	LARAMIE LONGHORN CREW/MEGA 2TM	LARAMIE LIMITED CREW/MEGA
2500	X	X	X	X	X	X	X	X	X	X	X
3500 SRW/DRW (6'4" box not available with Crew Cab DRW)	X/X	—	X/X	X/X	—	—	X/X	—	X/X	X/X	
ENGINE / TRANSMISSION											
5.7L HEMI® V8 gas engine / 6-speed automatic (66RFE; SRW only) 383 hp/400 lb-ft of torque	26A	—	26G	26 Z/Y	26T	—	26H	—	26K	26M	
5.7L HEMI Bi-fuel CNG/gas engine / 6-speed automatic (66RFE; 2500 Crew Cab 8' box only) 383 hp/400 lb-ft of torque	27A	—	27G	—	—	—	—	—	—	—	
6.4L HEMI V8 gas engine with MDS / 6-speed automatic (66RFE) 410 hp/429 lb-ft of torque (370 hp 3500 Mega Cab® only)	22A	22B	22G	22 Z/Y	22T	22P	22H	22J	22K	22M	
6.7L Cummins® Turbo Diesel engine / 6-speed manual (G56) 350 hp/660 lb-ft of torque	2EA	—	2EG	2E Z/Y	2ET	—	2EH	—	—	—	
6.7L Cummins Turbo Diesel engine / 6-speed automatic (68RFE) 370 hp/800 lb-ft of torque	2FA	—	2FG	2F Z/Y	2FT	—	2FH	—	2FK	2FM	
6.7L Cummins Turbo Diesel engine / 6-speed AISIN® heavy-duty automatic (3500 only) 385 hp/850 lb-ft of torque	28A	—	28G	28 Z/Y	—	—	28H		28K	28M	
Diesel Exhaust Fluid (DEF) System (standard with diesel engine)	P	—	P	P	P	—	P	—	P	P	
MECHANICAL FEATURES											
ALTERNATOR — 160-amp (standard with gas engine)	S	—	S	S	S	—	S	—	S	S	
— 180-amp (standard on diesel; included with Snowplow Prep Group on HEMI V8-equipped models)	O/P	S	O/P	O/P	O/P	S	O/P	S	O/P	O/P	
— 220-amp (included with Snowplow Prep Group on diesel- and 6.4L gas-equipped models; also included in dual alternator options)	O/P	—	O/P	O/P	O/P	—	O/P	—	O/P	O/P	
— Dual-rated at 380 amps (6.4L gas V8 only; includes 160-amp and 220-amp alternators)	0	0	0	0	0	0	0	0	0	0	
— Dual-rated at 440 amps (6.7L diesel only; includes two 220-amp alternators)	0	—	0	0	0	—	0	—	0	0	
AXLES — Antispin rear differential (standard on 3500)	O/S	—	O/S	S	S	—	O/S	—	O/S	O/S	
— Electronically locking front and rear differentials	—	S	—	—	—	S	—	S	—	—	
— 3.42 ratio (standard for diesel)	0	—	0	0	—	—	0	—	0	0	
— 3.73 ratio (standard for gas; available for 3500 DRW diesel)	S/O	—	S/O	S/O	S	—	S/O	—	S/O	S/O	
— 4.10 ratio (optional for gas; available for 3500 DRW diesel)	0	S	0	0	0	S	0	S	0	0	
— 11.5-inch rear axle – SRW	S	S	S	S	S	S	S	S	S	S	
— 11.5-inch rear axle – 3500 DRW only (included with 6.4L gas engine, diesel/G56 manual transmission, diesel/68RFE or diesel/AISIN transmission with 3.42 axle ratio)	P	—	P	P	—	—	P	—	P	P	
— 11.8-inch rear axle – 3500 DRW only (included with diesel/AISIN transmission with 3.73 and 4.10 axle ratios)	P	—	P	P	—	—	P	—	P	P	
BATTERY — 730-amp, maintenance-free (two required for diesel)	S	S	S	S	S	S	S	S	S	S	
DIESEL EXHAUST BRAKE — With "smart" function (included with diesel engine)	P	—	P	P	P	—	P	—	P	P	
ELECTRONIC UPFITTER MODULE — N/A with premium speakers	0	0	0	0	0	0	—	—	—	—	
ENGINE BLOCK HEATER — Included with Cold Weather Group on diesel	O/P	0	O/P	O/P	O/P	0	O/P	0	O/P	O/P	
FIFTH-WHEEL/GOOSENECK PREP PACKAGE — Includes in-box 7-pin harness connector (not available with RamBox® System)	0	—	0	0	0	—	0	—	0	0	
FUEL TANKS — 8-gallon tank (included with CNG engine)	P	—	P	—	—	—	—	—	—	—	
— 18.2-G.G.E. (gasoline gallon equivalent) dual CNG tanks (included with CNG engine)	P	—	P	—	—	—	—	—	—	—	
— 28-gallon tank (included with Regular Cab diesel)	P	—	P	—	—	—	—	—	—	—	
— 31-gallon tank (included with 6'4" box)	S	S	S	S	S	S	S	S	S	S	
— 32-gallon tank (included with 8' box; available with CNG engine)	S/O	—	S/O	S	S	—	S	—	S	S	
SHOCKS — Front, heavy-duty	S	—	S	S	S	—	S	—	S	S	
— Rear, heavy-duty	S	—	S	S	S	—	S	—	S	S	
— Bilstein® gas-charged monotube	—	S	—	—	—	S	—	S	—		
SKID PLATES (4x4) — Transfer case (included in Protection Group and Snowplow Prep Group)	P	S	P	P	S	S	P	S	P	P	
— Fuel tank	—	S	—	—	—	S	—	S	—	—	
STEERING — Power recirculating ball	S	S	S	S	S	S	S	S	S	S	
SUSPENSION — Front, three-link coil spring suspension	S	S	S	S	S	S	S	S	S	S	
— Front electronic disconnecting stabilizer bar	—	S	—	—	—	S	—	S	—		
— Front stabilizer bar	S	—	S	S	S	—	S	—	S	S	
— Rear, five-link coil spring suspension (2500 only)	S	S	S	S	S	S	S	S	S	S	
— Rear, Hotchkiss leaf spring suspension (3500 only)	S	—	S	S	—	—	S	—	S	S	
— Rear, Auto-Level dual-mode air spring suspension system (late availability)	0	—	0	0	0	—	0	—	0	0	
TOW HOOKS — 6.7L diesel engine	S	—	S	S	S	—	S	—	S	S	
— Gas engines (optional on 4x2; included in Protection Group on 4x4; standard on 3500)	O/P/S	S	O/P/S	O/P/S	S	S	O/P/S	S	S	S	
TRAILER TOW — 4- / 7-pin trailer harness plug (combination receptacle)	S	S	S	S	S	S	S	S	S	S	
— Class V hitch receiver	S	S	S	S	S	S	S	S	S	S	
TRANSFER CASES (4x4 MODELS ONLY) — Manual shift-on-the-fly	S	S	—	—	—	S	—	S	—	—	
— Electronic shift-on-the-fly	0	—	S	S	S	—	S	—	S	S	
WINCH — WARN,® front, electric, 12,000-lb capacity	—	S	—	—	—	S	—	S	—	—	
— Tire carrier	S	S	S	S	S	S	S	S	S	S	
EXTERIOR FEATURES											
BEDLINER — Spray-in (not available with Ram 2500 CNG model)	0	0	0	0	0	0	0	0	S	S	
BODY MODEL AND BOX — Regular Cab 8' box	0	—	0	—	—	—	—	—	—	—	
— Crew Cab 6'4" box (SRW only)	0	S	0	0	0	S	0	S	0	0	
— Crew Cab 8' box	0	—	0	0	0	—	0	—	0	0	
— Mega Cab 6'4" box	—	—	0	0	—	—	0	—	0	0	
BUMPERS — Painted Black	S	—	—	—	—	—	—	—	—	—	
— Chrome (included in Chrome Appearance Group and with Monotone paint)	P	S	S	S	P	S	S	S	P	—	
— Painted	—	—	—	—	S	—	—	—	S	S	
CLEARANCE LAMPS — Cab (included on DRW)	O/P	0	O/P	O/P	0	S	O/P	0	O/P	O/P	
— Box and rear fender (included on DRW)	P	—	P	P	—	—	P	—	P	P	
DOOR HANDLES — Black (included with low-volume paint)	S	S	P	P	S	S	—	—	—	—	
— Chrome	—	—	S	S	—	—	S	S	S	S	
FOG LAMPS	—	S	0	S	S	S	S	S	S	S	
GRILLE — Black surround with Black hex inserts	S	S	—	—	—	—	—	—	—	—	
— Chrome surround with Black hex inserts (included in Chrome Appearance Group)	P	—	S	—	—	—	—	—	—	—	
— Body-color surround with Black hex inserts	—	—	—	—	S	—	—	—	—	—	
— Chrome surround with chrome billet inserts	—	—	—	S	—	S	—	—	—	—	
— Chrome surround with chrome wave-perf inserts	—	—	—	—	—	—	S	S	—	—	
— Chrome surround with chrome wave-mesh inserts	—	—	—	—	—	—	—	—	S	S	

CPOS PACKAGE	TRADESMAN REG/CREW 2TA	POWER WAGON TRADESMAN CREW 2TB	SLT REG/CREW/MEGA 2TG	BIG HORN/LONE STAR CREW/MEGA 2TZ/2TY	OUTDOORSMAN CREW 2TT	POWER WAGON CREW 2TP	LARAMIE CREW/MEGA 2TH	POWER WAGON LARAMIE CREW 2TJ	LARAMIE LONGHORN CREW/MEGA 2TK	LARAMIE LIMITED CREW/MEGA 2TM
EXTERIOR FEATURES (continued)										
HEADLAMPS / TAILLAMPS — Automatic headlamps	S	S	S	S	S	S	S	S	S	S
— Quad halogen headlamps / incandescent taillamps	S	S	S	S	S	—	—	—	—	—
— Premium projector headlamps / premium LED taillamps	—	—	—	—	—	S	S	S	S	S
— Auto High-Beam Headlamp Control (included in Convenience Group)	—	—	—	—	—	—	P	P	P	S
HEADLAMP FILLER PANEL — Black (included with special-order paint)	0	S	0	0	—	S	—	—	—	—
— Body-color	S	—	S	S	S	—	S	S	S	S
MIRRORS — 2500 — Standard size, 6 x 9-inch										
— Manual (Black; Regular Cab only)	S	—	—	—	—	—	—	—	—	—
— Power / heated (Black; included in Power and Remote Entry Group on Tradesman Regular Cab)	P/S	S	S	S	—	S	—	—	—	—
— Power folding / heated / puddle / turn / auto-dim (Black; included in Luxury Group)	—	—	P	P	S	P	—	—	—	—
— Power folding / heated / puddle / turn / auto-dim / memory (chromed)	—	—	—	—	—	—	S	S	S	S
2500 — Available size, 7 x 11-inch (trailer-tow mirrors, two-position fold-away with convex edge)										
— Manual (Black; Regular Cab only)	0	0	—	—	—	—	—	—	—	—
— Power / heated / puddle / turn (Black; requires Power and Remote Entry Group on Tradesman Regular Cab)	0	0	0	0	0	0	—	—	—	—
— Power / heated / puddle / turn / memory (chrome)	—	—	—	—	—	—	0	0	0	0
3500 — Standard size, 7 x 11-inch (trailer-tow mirrors, two-position fold-away with convex edge)										
— Manual (Black; Regular Cab only)	S	—	—	—	—	—	—	—	—	—
— Power / heated / puddle / turn (Black; included in Power and Remote Entry Group)	P	—	S	S	—	—	—	—	—	—
— Power / heated / puddle / turn / memory (chrome)	—	—	—	—	—	—	S	—	S	S
RAMBOX CARGO MANAGEMENT SYSTEM — With illuminated, lockable, drainable bins on both bed sides; stowable bed divider/extender; and Cargo Rail System with adjustable cleats (Short Box only; SRW only; Tradesman model requires remote keyless entry; N/A with low-volume paints)	0	0	0	0	0	0	0	0	0	S
RUNNING BOARDS	—	—	—	—	—	—	—	—	S	—
SIDE STEPS — Chrome, cab-length; included with Monotone Laramie Longhorn	0	—	0	0	0	—	0	—	O/P	—
— Chrome, wheel-to-wheel; not available on Regular Cab or DRW	0	—	0	0	0	—	0	—	0	S
TONNEAU COVER (not available with Ram 2500 CNG model)	0	0	0	0	0	0	0	0	0	0
WHEEL FLARES — Black	—	S	—	—	S	S	—	—	—	—
— Bright Silver Metallic	—	—	—	—	—	—	S	—	—	—
— White Gold Metallic	—	—	—	—	—	—	—	—	S	—
— Body-color (included with monotone paint)	—	—	—	—	P	—	P	S	P	—
WINDSHIELD WIPERS — Variable / intermittent	S	S	S	S	S	S	S	S	S	S
— Rain-sensing (included in Convenience Group)	—	—	—	—	—	—	P	P	P	S
INTERIOR FEATURES										
AIR CONDITIONING	S	S	S	S	S	S	—	—	—	—
AIR CONDITIONING WITH DUAL-ZONE CONTROL	—	—	—	—	—	—	S	S	S	S
AUXILIARY INSTRUMENT PANEL SWITCHES — N/A with Comfort Group or with Uconnect® 3.0 or 5.0 radios (late availability)	0	—	0	0	0	—	0	—	0	0
BEZEL, CENTER STACK — Black	S	S	—	—	—	—	—	—	—	—
— Color-keyed	—	—	S	S	S	S	—	—	—	—
— Woodgrain	—	—	—	—	—	—	S	S	—	—
— Real wood	—	—	—	—	—	—	—	—	S	S
CIGAR LIGHTER (included in Smoker's Group)	P	P	P	P	P	P	P	P	P	P
CLUSTER — 3.5-inch Electronic Vehicle Information Center (EVIC)	S	S	S	S	—	S	—	—	—	—
— 7-inch Thin Film Transistor (TFT) (included in Luxury Group)	—	—	P	P	S	P	S	S	—	—
— 7-inch TFT (with Laramie Longhorn filigree)	—	—	—	—	—	—	—	—	S	—
— 7-inch TFT (with unique Laramie Limited detail)	—	—	—	—	—	—	—	—	—	S
CONSOLE — Mini floor console (included with 6-speed manual transmission or manual transfer case)	P	S	P	P	P	S	P	S	—	—
— Full-size floor console (included with bucket seats)	—	—	P	P	P	—	P	—	S	S
— Overhead console	—	—	S	—	—	S	—	—	—	—
— Overhead console with Universal Garage Door Opener (included in Luxury Group)	—	—	P	P	S	P	S	S	S	S
DOOR LOCKS — Manual door locks (Regular Cab only)	S	—	—	—	—	—	—	—	—	—
— Power door locks (included in Power and Remote Entry Group on Tradesman Regular Cab)	P/S	S	S	S	S	S	S	S	S	S
— Keyless Enter 'n Go™	—	—	—	—	—	—	0	0	0	S
FLOOR COVERING — Black vinyl (not available on Mega Cab)	S	S	0	0	0	0	—	—	—	—
— Carpet (included in Popular Equipment Group)	P	P	S	S	S	S	S	S	S	S
FLOOR MATS — Front, carpeted (Regular Cab only; included in Tradesman Popular Equipment Group; requires carpet floor covering)	P	—	S	—	—	—	—	—	—	—
— Front and rear, carpeted (included in Popular Equipment Group; requires carpet floor covering)	P	P	S	S	—	S	S	S	—	—
— Front, rubber (Regular Cab only; requires carpet floor covering)	0	—	0	—	—	—	—	—	—	—
— Front and rear, rubber	0	0	0	0	S	0	—	—	—	—
— Front and rear, luxury	—	—	—	—	—	—	—	—	S	S
MIRRORS — Rearview day/night	S	S	S	—	—	S	—	—	—	—
— Rearview day/night with microphone (included with Uconnect 3.0, 5.0 and 8.4A radios, without Luxury Group)	—	—	P	S	—	—	—	—	—	—
— Rearview auto-dimming with microphone (included with Luxury Group)	—	—	P	P	S	P	S	S	S	S
— Rearview auto-dimming with video display (included with Cargo-View Camera[7] in combination with back-up camera;[7] or with Uconnect 3.0 radio and back-up camera[7])	P	P	P	P	P	P	P	P	P	P
— Rcall/Ecall buttons (packaged with Uconnect 8.4A and 8.4AN radios)	—	—	P	P	P	P	S	S	S	S
PEDALS — Non-adjustable	S	S	S	S	S	S	S	S	—	—
— Power-adjustable (requires automatic transmission)	—	—	0	0	0	0	—	—	—	—
— Power-adjustable with memory (requires automatic transmission)	—	—	—	—	—	—	0	0	S	S
POWER SUNROOF (not available with Regular Cab)	—	—	0	0	0	0	0	0	0	0
SEATS — Manually adjustable driver and front-passenger seat (included with *TX and *V9 seats)	P	P	S	—	—	S	—	—	—	—
— Ten-way power driver's seat and manual front-passenger seat (included with *M9 and *MJ seats)	—	—	P	S	S	P	—	—	—	—
— Ten-way power driver's seat with memory and 6-way power front-passenger seat (included with *VL, *GJ, *XJ and *DJ seats)	—	—	—	—	—	—	S	S	S	S
— Two-way power lumbar support (included with *M9 and *MJ seats)	—	—	P	S	S	P	S	S	S	S
— Heated front seats (included in Comfort Group)	—	—	—	P	P	P	S	S	S	S

S = Standard. 0 = Optional. P = Part of package.
Note: some features and/or applications may be late availability.

CPOS PACKAGE	2TA TRADESMAN REG/CREW	2TB POWER WAGON® TRADESMAN CREW	2TG SLT REG/CREW/MEGA	2T2/2TY BIG HORN/LONE STAR CREW/MEGA	2TT OUTDOORSMAN CREW	2TP POWER WAGON CREW	2TH LARAMIE CREW/MEGA	2TJ POWER WAGON LARAMIE CREW	2TK LARAMIE LONGHORN CREW/MEGA	2TM LARAMIE LIMITED CREW/MEGA
INTERIOR FEATURES (continued)										
SEATS (continued)										
— Heated rear seats (Crew Cab and Mega Cab® only; included with *GJ seats)	—	—	—	—	—	—	P	—	S	S
— Ventilated front seats	—	—	—	—	—	—	S	S	S	S
STEERING WHEEL — Urethane	S	S	S	—	—	S	—	—	—	—
— Leather-wrapped with audio controls (included in Luxury Group)	—	—	P	S	S	P	—	—	—	—
— Leather-wrapped, heated with audio controls (included in Comfort Group)	—	—	—	P	P	—	S	S	—	—
— Leather-wrapped, heated, with real wood and audio controls	—	—	—	—	—	—	—	—	S	S
STORAGE — Behind the seat (Regular Cab and Mega Cab)	S	—	S	S	S	—	S	—	S	S
— Front center-seat-cushion storage (included in *VL and *M9 seats)	—	—	P	P	P	P	P	P	—	—
— Rear, under-seat compartment (Crew Cab only)	S	S	S	S	S	S	S	S	S	S
— Rear, in-floor storage boxes (Crew Cab only)	S	S	S	S	S	S	S	S	S	S
— Flat-folding load floor (Crew Cab only; included in *M9 seats and above)	—	—	P	S	S	P	S	S	S	S
VISORS — Passenger-side, with vanity mirror	—	—	S	S	—	S	—	—	—	—
— Driver and passenger-side, with illuminated vanity mirror (included with Luxury Group)	—	—	P	P	S	P	S	S	S	S
WINDOWS — Manual windows (Regular Cab only)	S	—	—	—	—	—	—	—	—	—
— Power windows, front one-touch down (Regular Cab; included in Power and Remote Entry Group)	P	—	S	—	—	—	—	—	—	—
— Power windows, front one-touch up/down (Crew Cab and Mega Cab)	S	S	S	S	S	S	S	S	S	S
— Rear fixed window	S	S	—	—	—	—	—	—	—	—
— Rear sliding window, manual (Regular Cab)	0	—	S	—	—	—	—	—	—	—
— Rear sliding window, power (Crew Cab and Mega Cab)	—	—	S	S	S	S	S	S	S	S
— Rear window defroster (requires rear sliding window)	—	—	0	0	0	0	0	0	0	0
UCONNECT® MULTIMEDIA										
CONNECTIVITY — 12-volt DC auxiliary	S	S	S	S	S	S	S	S	S	S
— 115-volt AC auxiliary (included with *M9 and *MJ seats)	—	—	P	S	S	P	S	S	S	S
— 2.5-amp charging USB port (included with Uconnect 5.0, 8.4A and 8.4AN radios, or *M9 and *MJ seats)	P	P	P	P	S	P	S	S	S	S
MEDIA HUB (included with Uconnect 3.0 and 5.0 radios)	S	S	S	S	—	S	—	—	—	—
— 1.5-amp fully functional USB port, auxiliary jack for mobile devices										
MEDIA HUB (included with Uconnect 8.4A and 8.4AN radios)	—	—	P	P	S	P	S	S	S	S
— 1.5-amp fully functional USB port, auxiliary jack for mobile devices and SD card slot										
RADIOS — Uconnect 3.0 AM/FM	S	S	—	—	—	—	—	—	—	—
— Uconnect 5.0 AM/FM/SAT/Bluetooth® (5-inch touch-screen display)	0	0	S	S	—	S	—	—	—	—
— Uconnect 8.4A AM/FM/SAT/Bluetooth/NAV-ready/Voice Command[11] (8.4-inch touch-screen display)	—	—	0	0	S	0	S	S	—	—
— Uconnect 8.4AN AM/FM/SAT/Bluetooth/NAV/Voice Command[11] (8.4-inch touch-screen display)	—	—	—	0	0	0	0	0	S	S
RADIO CONTROLS — Steering wheel-mounted audio controls (included in Luxury Group)	—	—	P	S	S	P	S	S	S	S
RCALL/ECALL (packaged with Uconnect 8.4A and 8.4AN radios)	—	—	P	P	S	P	S	S	S	S
SINGLE-DISC CD PLAYER	0	0	0	0	0	0	0	0	0	0
SIRIUSXM® SATELLITE RADIO[9] (included in Tradesman Popular Equipment Group)	P	P	S	S	S	S	S	S	S	S
SIRIUSXM TRAFFIC[9] AND SIRIUSXM TRAVEL LINK[10] (included with Uconnect 8.4 AN radio)	—	—	—	P	P	P	P	P	S	S
SPEAKER SYSTEMS — Six-speakers	S	S	S	S	S	S	—	—	—	—
— Six premium speakers (Regular Cab only)	—	—	0	—	—	—	—	—	—	—
— Nine amplified speakers with subwoofer (Surround Sound requires ADA and *M9 or higher seat)	—	—	0	0	0	0	S	S	S	S
UCONNECT VOICE COMMAND[11] (included with Uconnect 5.0, 8.4A and 8.4AN radios)	P	P	S	S	S	S	S	S	S	S
TIRES AND WHEELS										
TIRES — 2500										
— LT245/70R17E BSW All-Season tires	S	—	—	—	—	—	—	—	—	—
— LT285/70R17D OWL All-Terrain tires	—	S	—	—	—	S	—	S	—	—
— LT275/70R18E BSW All-Season tires (included with Chrome Appearance Group)	P	—	S	S	—	—	S	—	S	—
— LT275/70R18E OWL On-/Off-Road tires (included with Popular Equipment Group)	0	—	P/0	0	S	—	0	—	0	—
— LT285/60R20E OWL On-/Off-Road tires (included with optional 20-inch wheels)	—	—	P	P	P	—	P	—	P	S
— Full-size spare tire	S	S	S	S	S	S	S	S	S	S
— Add full-size spare tire (requires Box Delete)	0	—	0	0	—	—	—	—	—	—
3500 Single Rear Wheel										
— LT275/70R18E BSW All-Season tires	S	—	S	S	—	—	S	—	S	—
— LT275/70R18E OWL On-/Off-Road tires (included with Popular Equipment Group)	0	—	P/0	0	—	—	0	—	0	—
— LT285/60R20E OWL On-/Off-Road tires (included with optional 20-inch wheels)	—	—	0	0	—	—	0	—	0	S
3500 Dual Rear Wheel										
— LT235/80R17E BSW All-Season tires	S	—	S	S	—	—	S	—	S	S
— LT235/80R17E OWL On-/Off-Road tires (included with Popular Equipment Group)	0	—	0/P	0	—	—	0	—	0	0
WHEELS — 2500										
— 17 x 7.5-inch steel painted	S	—	—	—	—	—	—	—	—	—
— 17 x 8-inch polished forged aluminum	—	S	—	—	—	S	—	S	—	—
— 18 x 8-inch steel painted	0	—	—	—	—	—	—	—	—	—
— 18 x 8-inch steel chrome-clad (included with Chrome Appearance Group)	P	—	S	—	—	—	—	—	—	—
— 18 x 8-inch polished forged aluminum	—	—	0	S	S	—	—	—	—	—
— 18 x 8-inch polished aluminum	—	—	—	—	—	—	S	—	—	—
— 18 x 8-inch polished aluminum with White Gold pockets	—	—	—	—	—	—	—	—	S	—
— 18 x 8-inch polished aluminum with Silver pockets (included with Monotone paint)	—	—	—	—	—	—	—	—	P	—
— 20 x 8-inch aluminum painted Black wheel (included with Black Appearance Group)	—	—	—	P	—	—	P	—	—	—
— 20 x 8-inch aluminum painted Satin Carbon with chrome inserts	—	—	0	0	0	—	0	—	—	S
— 20 x 8-inch polished aluminum with White Gold pockets	—	—	—	—	—	—	—	—	0	—
— 20 x 8-inch polished aluminum with Silver pockets (optional with Monotone paint)	—	—	—	—	—	—	—	—	0	—
— Steel spare wheel	S	S	S	S	S	S	S	S	S	S

CPOS PACKAGE	2TA TRADESMAN REG/CREW	2TB POWER WAGON TRADESMAN CREW	2TG SLT REG/CREW/MEGA	2T2/2TY BIG HORN/LONE STAR CREW/MEGA	2TT OUTDOORSMAN CREW	2TP POWER WAGON CREW	2TH LARAMIE CREW/MEGA	2TJ POWER WAGON LARAMIE CREW	2TK LARAMIE LONGHORN CREW/MEGA	2TM LARAMIE LIMITED CREW/MEGA
TIRES AND WHEELS (continued)										
3500 Single Rear Wheel										
— 18 x 8-inch steel painted	S	—	—	—	—	—	—	—	—	—
— 18 x 8-inch steel chrome-clad (included in Chrome Appearance Group)	P	—	S	—	—	—	—	—	—	—
— 18 x 8-inch polished forged aluminum	—	—	0	S	—	—	—	—	—	—
— 18 x 8-inch polished aluminum	—	—	—	—	—	—	S	—	—	—
— 18 x 8-inch polished aluminum with White Gold pockets	—	—	—	—	—	—	—	—	S	—
— 18 x 8-inch polished aluminum with Silver pockets (included with Monotone paint)	—	—	—	—	—	—	—	—	P	—
— 20 x 8-inch aluminum painted Black (included with Black Appearance Group)	—	—	—	P	—	—	P	—	—	—
— 20 x 8-inch aluminum painted Satin Carbon with chrome inserts	—	—	0	0	—	—	0	—	—	S
— 20 x 8-inch polished aluminum with White Gold pockets	—	—	—	—	—	—	—	—	0	—
— 20 x 8-inch polished aluminum with Silver pockets (optional with Monotone paint)	—	—	—	—	—	—	—	—	0	—
— Steel spare wheel	S	—	S	S	—	—	S	—	S	S
3500 Dual Rear Wheel										
— 17 x 6-inch steel painted	S	—	—	—	—	—	—	—	—	—
— 17 x 6-inch steel with chrome finish (included in Chrome Appearance Group)	P	—	S	S	—	—	—	—	—	—
— 17 x 6-inch polished aluminum	—	—	0	0	—	—	S	—	—	S
— 17 x 6-inch polished aluminum with Laramie Longhorn cap	—	—	—	—	—	—	—	—	S	—
— 17-inch steel spare (included with DRW)	S	—	S	S	—	—	S	—	S	S
SAFETY AND SECURITY										
AIR BAGS[8] — Multistage front and knee bolsters	S	S	S	S	S	S	S	S	S	S
— Supplemental side-curtain	S	S	S	S	S	S	S	S	S	S
— Supplemental front-seat side-mounted	S	S	S	S	S	S	S	S	S	S
BRAKES — Four-wheel antilock disc brakes	S	S	S	S	S	S	S	S	S	S
CARGO-VIEW CAMERA[7] (requires Uconnect 8.4A or 8.4AN radios)	—	—	0	0	0	0	0	0	0	0
ELECTRONIC STABILITY CONTROL[6] — Includes Brake Assist, Electronic Roll Mitigation, Hill Start Assist, Rain Brake Support, Ready Alert Braking, All-Speed Traction Control and Trailer Sway Control[6]	S	S	S	S	S	S	S	S	S	S
ELECTRONIC TRAILER BRAKE CONTROLLER	0	0	S	S	S	S	S	S	S	S
KEY ALIKE (3500 only; N/A with Keyless Enter 'n Go™; late availability)	0	0	0	0	0	0	0	0	0	0
PARKSENSE® REAR PARK ASSIST[7]	0	0	0	0	0	0	S	S	S	S
PARKVIEW® REAR BACK-UP CAMERA[7] — Video displayed in rearview mirror with Uconnect 3.0 radio or on-screen with Cargo-View Camera[7] with other radios	0	0	0	0	0	0	S	S	S	S
REMOTE KEYLESS ENTRY — Controls for power door locks, tailgate, RamBox® System, illuminated entry system, panic alarm (included in Tradesman Popular Equipment or Power and Remote Entry Group)	P	P	S	S	S	S	S	S	S	S
REMOTE START (requires automatic transmission)	—	—	0	S	S	0	0	0	S	S
SECURITY ALARM — Detects break-in	—	—	0	0	S	0	S	S	S	S
SENTRY KEY® THEFT DETERRENT SYSTEM — Engine immobilizer	S	S	S	S	S	S	S	S	S	S
TIRE PRESSURE MONITORING (TPM) with EVIC display and alert (2500 only)	S	S	S	S	S	S	S	S	S	S
TIRE PRESSURE INFORMATION SYSTEM WITHOUT ALERT (3500 models only)	S	—	S	S	—	—	S	—	S	S
PACKAGES / EQUIPMENT GROUPS										
BLACK APPEARANCE GROUP — Includes Black door handles, Black exterior mirrors, Black Ram tailgate badge, Black 4x4 badge (4x4 only), blacked-out projector head lamps and LED taillamps, Black painted front and rear bumpers, Black grille and 20-inch Black painted wheels with OWL tires (SRW Models only)	—	—	—	0	—	—	0	—	—	—
BOX DELETE — Regular Cab, Crew Cab, with 5.7L gas engine	0	—	0	0	—	—	—	—	—	—
CHROME APPEARANCE GROUP — Includes chrome bumpers, chrome grille surround and steel chrome-clad wheels (SRW) or steel wheels with chrome finish (DRW)	0	—	—	—	—	—	—	—	—	—
CHROME LIMITED APPEARANCE GROUP — Includes chrome bodyside molding, body-color fender flares and chrome bumpers	—	—	—	—	—	—	—	—	—	0
COLD WEATHER GROUP — Includes engine block heater and winter front grille cover (diesel only)	0	—	0	0	0	—	0	—	0	0
COMFORT GROUP — Includes heated cloth seats and heated leather steering wheel (requires *M9 or *MJ seats; included with Luxury Group); also includes remote start (with automatic transmission) and leather-wrapped steering wheel	—	—	—	0/P	0	0	—	—	—	—
CONVENIENCE GROUP — Auto High-Beam Headlamp Control, rain-sensing wipers (N/A with Cargo-View Camera[7])	—	—	—	—	—	—	0	—	0	—
DOT-CERTIFIED ROADSIDE SAFETY KIT — Includes DOT fire extinguisher, three reflecting triangles, two red vinyl flags and spare fuses	0	0	0	0	0	0	0	0	0	0
DUAL REAR WHEEL GROUP — 3500 only; N/A with Crew Cab 6'4" box (includes clearance lamps for the cab, box and fenders)	0	—	0	0	—	—	0	—	0	0
FIFTH-WHEEL/GOOSENECK TOWING PREP GROUP — Includes in-bed 7-pin harness connector and mounting provisions for 5th-wheel or gooseneck hitches	0	—	0	0	0	—	0	—	0	0
LUXURY GROUP — Includes 7-inch EVIC, switchable dome lamp, ashtray lamp, illuminated vanity mirror, auto day/night mirror, exterior power folding mirrors with signal and puddle lamps, overhead console with Universal Garage Door Opener; for 2TG/2TP only: leather-wrapped steering wheel with audio controls, glove box lamp, under-hood lamp; for 2TY/2TZ only: Comfort Group	—	—	0	0	S	0	—	—	—	—
POPULAR EQUIPMENT GROUP — Includes 40/20/40 cloth bench seat, carpeted flooring, floor mats, remote keyless entry and SiriusXM Satellite Radio[9]	0	0	—	—	—	—	—	—	—	—
POPULAR EQUIPMENT GROUP — Premium cloth 40/20/40 bench seat, fog lamps, OWL tires (Regular Cab only)	—	—	0	—	—	—	—	—	—	—
POWER AND REMOTE ENTRY GROUP — Includes premium vinyl door trim, remote keyless entry, power heated mirror, power windows and power locks (Regular Cab only)	0	—	—	—	—	—	—	—	—	—
PROTECTION GROUP (4x4 ONLY) — Includes tow hooks and transfer case skid plate	0	—	0	0	S	—	0	—	0	0
SMOKER'S GROUP — Includes removable ashtray and cigar lighter	0	0	0	0	0	0	0	0	0	0
SNOWPLOW PREP GROUP — 180-amp alternator (gas), 220-amp (diesel), transfer case skid plate (4x4 models only)	0	—	0	0	0	—	0	—	0	0

S = Standard. 0 = Optional. P = Part of package. N/A = Not available.
Note: some features and/or applications may be late availability.

Properly secure all cargo.

LET'S KEEP IT AUTHENTIC.

Ram 2500 Crew Cab Tradesman in Bright White shown with available Mopar® Wheel Flares, Black Tubular Side Steps, RamBox® System Cargo Organizer, Sliding Toolbox and Bed Step. Properly secure all cargo.

MOPAR. SUPPORTING YOU AND YOUR RAM—FOR THE LONG HAUL.

Make your new Ram truck the ideal ride—for today, and for years to come.

The Authentic Ram Parts and Accessories by Mopar are engineered by the same experts who designed your Ram, ensuring perfect fit, function and finish. You'll benefit from trained technicians who know your make and model best and use genuine parts to keep your Ram going strong.

Today, Mopar provides more than just Authentic Accessories for your Ram truck. Our all-inclusive advantages encompass Mopar Express Lane Service to minimize waiting and downtime, Mopar Vehicle Protection™ Plans—the only extended protection plans backed by the manufacturer—and our state-of-the-art Mopar Owner Connect™ Web site. Here's where you'll find online access to your service records, vehicle information and exclusive money-saving offers that give you the best from Mopar—for less. In every way, Mopar support is all about keeping you happy and your Ram truck at its best. For more, visit us at **mopar.com**

Sport Performance Hood Decal Kit (Ram 1500)

Under-the-Rail Bedliner

Roll-Up Tonneau Cover

Fifth-Wheel Hitch with Glider

RAM

RAMTRUCKS.COM

[1] Based on latest available competitive information. Class based on 250/2500 and 350/3500 pickups. [2] Based on latest available competitive information. Class based on light-duty pickups. [3] Transferable. See dealer for complete details and a copy of the 5-Year/100,000-Mile Powertrain Limited Warranty. [4] Based on Standard Pickup class. EPA estimated mpg based on V6 4x2. Actual results may vary. [5] Only diesel in the Light-Duty Pickup class. [6] No system, no matter how sophisticated, can repeal the laws of physics or overcome careless driving actions. Performance is limited by available traction, which snow, ice, and other conditions can affect. When the ESC warning lamp flashes, the driver needs to use less throttle and adapt speed and driving behavior to prevailing road conditions. Always drive carefully, consistent with conditions. Always wear your seat belt. [7] Always look before proceeding, electronic drive aid is not a substitute for conscientious driving, always be aware of your surroundings. [8] The Advanced Front Air Bags in this vehicle are certified to the new U.S. federal regulations for advanced air bags. Children 12 years old and younger should always ride buckled up in a rear seat. Infants in rear-facing child restraints should never ride in the front seat of a vehicle with a passenger front air bag. All occupants should always wear their lap and shoulder belts properly. [9] SiriusXM services require subscriptions, sold separately after the 12-month trial included with the new vehicle purchase. If you decide to continue your service at the end of your trial subscription, the plan you choose will automatically renew and bill at then-current rates until you call SiriusXM at 1-866-635-2349 to cancel. See SiriusXM Customer Agreement for complete terms at www.siriusxm.com. All fees and programming subject to change. Our satellite service is available only to those at least 18 and older in the 48 contiguous USA and D.C. Our Sirius satellite service is also available in PR (with coverage limitations). Our Internet radio service is available throughout our satellite service area and in AK and HI. ©2013 Sirius XM Radio Inc. Sirius, XM and all related marks and logos are trademarks of Sirius XM Radio Inc. [10] The SiriusXM Travel Link data displays and individual product availability vary by vehicle hardware. Not all vehicles or devices are capable of receiving all Travel Link services offered by SiriusXM; Weather Forecast, Current Conditions may not be available in all locations; and features of individual systems will vary. Images within are for representative purposes only and are not real products. For actual features and images of real products, consult the vehicle manufacturer. SiriusXM is not responsible for any errors or inaccuracies in the SiriusXM Travel Link services or their use. Our satellite service is available only to those at least 18 and older in the 48 contiguous USA and DC. Our Sirius satellite service is also available in PR (with coverage limitations). Our Internet radio service is available throughout our satellite service area and in AK and HI. [11] Requires Uconnect Phone. [12] Uconnect Access is available only on equipped vehicles purchased within the continental United States and Alaska. Services can only be used where coverage is available, see coverage map for details. For a complete list of Uconnect Access services, please visit http://www.driveuconnect.com/features/uconnect_access/packages. [13] Your new vehicle may come with an included trial period for use of the Uconnect Access Services. Your trial begins the day you take delivery of your vehicle, so register as soon as possible. To activate the trial, you must register with Uconnect Access. [14] WiFi Hotspot does not enable direct communication between multiple in-vehicle devices. Factors affecting the performance of WiFi Hotspot include: cellular network, signal strength and quality, time of day, number of channels used by the service provider, type of connection, number of clients using WiFi Hotspot and client device. [15] Voice Text Reply and Voice Texting features require a compatible mobile device enabled with Bluetooth Message Access Profile (MAP). iPhone and some other smartphones do not currently support Bluetooth MAP. Vehicle must be registered for Uconnect Access and you must fulfill minimum subscription requirements. Also requires the use of a compatible smartphone that supports text messaging and Bluetooth. Visit www.UconnectPhone.com for system and device compatibility. [16] The 9-1-1 Call button will connect you directly with Emergency Assistance. If you accidentally press the button, you have 10 seconds to cancel the call by either pressing the 9-1-1 button on the rearview mirror or the cancel button on the Uconnect touch screen. [17] If Roadside Assistance is provided to your vehicle, you agree to be responsible for any additional roadside assistance service costs that you may incur. In order to provide Uconnect Services to you, we may record and monitor your conversations with Roadside Assistance, Uconnect Care or Vehicle Care, whether such conversations are initiated through the Uconnect Services in your vehicle, or via landline or mobile telephone, and may share information obtained through such recording and monitoring in accordance with regulatory requirements. You acknowledge, agree and consent to any recording, monitoring or sharing of information obtained through any such call recordings. [18] Vehicle must be within the United States, have network coverage and must be registered with Uconnect Access with an active subscription that includes the applicable feature and you must fulfill minimum subscription requirements. It must also be equipped with features that enable remote commands, such as keyless entry, and must be in active and usable cellular range. The Uconnect Access App must be installed and launched on your mobile device to use these remote commands. Remote features are available only on vehicles that are properly equipped. [19] Always sit properly with the head restraint properly adjusted. Never place anything in front of the head restraint.

About this catalog: Since the time of printing, some of the information you'll find in this catalog may have been updated. Ask your dealer for details. Some of the equipment shown or described throughout this catalog may be available at extra cost. Specifications, descriptions, illustrative materials, and all competitive comparisons contained herein are as accurate as known at the time this publication was approved for printing. Chrysler Group LLC reserves the right to discontinue models at any time or change specifications without notice or without incurring obligation. All options are required in combination with other options. For the price of the model with the equipment you desire, or verification of specifications contained here, see your Ram dealer. AISIN is a registered trademark of Aisin Seiki Co., Ltd. Cummins is a registered trademark of Cummins, Inc. WARN is a registered trademark of Warn Industries, Inc. CNH, Case IH and New Holland are registered trademarks of CNH America LLC. Towmaster is a registered trademark of Towmaster, Inc. iPod, iPad, and iTunes are registered trademarks of Apple Inc. Bluetooth is a registered trademark of Bluetooth SIG, Inc. Bosch is a registered trademark of Robert Bosch GmbH. Bilstein is a registered trademark of August-Bilstein GmbH & Co. Sirius, XM and all related marks and logos are trademarks of Sirius XM Radio Inc. Facebook and logo are trademarks of Facebook, Inc. The Twitter logo is a service mark of Twitter, Inc. Instagram and logo are registered trademarks of Instagram, Inc. The YouTube logo is a trademark of Google Inc. Yelp is a registered trademark of Yelp. NFL is a registered trademark of the National Football League. MLB is a registered trademark of Major League Baseball. Chrysler, Ram, the Ram's Head logo, Big Horn, HEMI, Laramie, Laramie Longhorn, Mega Cab, Mopar, Outdoorsman, ParkSense, ParkView, Pentastar, Power Wagon, Quad Cab, RamBox, Sentry Key, TorqueFlite, Tradesman, and Uconnect are registered trademarks and Active Air, Active-Level, All-Secure, Keyless Enter 'n Go, HFE High Fuel Efficiency & Design, Mopar Owner Connect and Mopar Vehicle Protection are trademarks of Chrysler Group LLC. © 2013 Chrysler Group LLC. All rights reserved.

YouTube™ RAM ZONE

Join fellow Ram enthusiasts and tell your story by posting comments, participating in discussions, and sharing your photos and videos. Join our community on Facebook, submit your photos on Instagram, follow us on Twitter and check us out on YouTube.

GO MOBILE. Take a multimedia tour of your vehicle on your mobile device. Visit the Chrysler Group LLC page in iTunes® from your smartphone or iPad® to download the most up-to-date vehicle apps. Log on to the **ramtrucks.com** mobile site for an at-a-glance review of what you need to know about your Ram truck. Experience visual and interactive demonstrations while gaining access to product information at your fingertips, wherever you go.

THE RAM OUTFITTER

Owning a new 2014 Ram opens up a world of new apparel, tools, and a variety of equipment for work and play. The one place to find it all is the Ram Outfitter site.

This is the online shopping center for gear and gifts for the Ram enthusiast. With the Ram identity prominently featured, you can choose from authentic wear, sports equipment, electronics and attire. Log on. It's all at ramtrucks.com/outfitter